WEAVER
BOOS
CONSULTANTS
LLC
SOUTHWEST

6420 SOUTHWEST BLVD, SUITE 206
FORT WORTH, TEXAS 76109
PHONE: 817.735.9770
FAX: 817.735.9775
www.weaverboos.com

Chicago, IL
Naperville, IL
Springfield, IL
South Bend, IN
St. Louis, MO
Columbus, OH
Denver, CO
Fort Worth, TX
Clermont, FL
Grand Rapids, MI
Portland, OR

April 21, 2011
Project No. 0086-413-11-02-01

Ms. Christine Bergren
Air Section Manager
Region 13 Office
Texas Commission on Environmental Quality
14250 Judson Rd
San Antonio, Texas 78233-4480

Re: Performance Test Report for Generator Engines (NSPS Subpart JJJJ)
Mesquite Creek Landfill Renewable Energy Facility
Air Standard Permit Registration No. 82411
RN 100218676 CN 600127856
Account Number: CS-0113-G
New Braunfels, Comal County, Texas

Dear Ms. Bergren:

On behalf of our client Waste Management of Texas, Inc. (WM), Weaver Boos Consultants, LLC–Southwest (WBC) is submitting the completed Performance Testing Report for two landfill gas (LFG) fueled electric generating engines (EPN: ICENGINE3) at the Mesquite Creek Landfill Renewable Energy (Energy) Facility located at the Mesquite Creek Landfill in Comal County.

The site has an active landfill gas collection and control system. The LFG extracted from the landfill is routed to an onsite flare and two generator engines at the Energy facility. The emissions from the generator engines are authorized under Standard Permit No. 82411.

The enclosed Performance Testing Report summarizes the emissions for the two generator engines. The test was completed by RMC Environmental, Inc. on February 23, 2011 in accordance with Title 40 of the Code of Federal Regulations (40 CFR), Part 60, Standards of Performance for New Stationary Sources (NSPS), Subpart JJJJ. As summarized below and referenced from Section 3 of the Performance Testing Report, the results of the performance test determined that the engines comply with the requirements within 40 CFR NSPS Subpart JJJJ. These results will be used to comply with the certification requirements in Standard Permit for Electric Generating Units.

Performance Test Results

Engine Facility Identification Number (FIN)	NO_x Emission Rate (g/BHP-Hr)	CO Emission Rate (g/BHP-Hr)	VOC Emission Rate (g/BHP-Hr)
ENG1	0.58	2.54	0.09
ENG2	0.57	2.58	0.10

We trust this information is adequate for TCEQ review. If you have any questions regarding the enclosed information, please feel free to call.

Sincerely,
Weaver Boos Consultants, LLC–Southwest

Archana Nagaraj
Air Quality Manager

Attachment: Performance Testing Report

cc: TCEQ Air Permits Division, Austin
Vic Saufley, Waste Management Renewable Energy, LLC.
Phil Duncan, Waste Management of Texas, Inc.
Matt K. Stutz, P.E., Weaver Boos Consultants, LLC–Southwest

PERFORMANCE TESTING
FEBRUARY 2011

As Defined By
Title 40 Code of Federal Regulations Part 60, Subpart JJJJ &
Standard Permit for Electric Generating Units

RMCEINC Project #2011-17001

WASTE MANAGEMENT OF TEXAS, INC.
MESQUITE CREEK LANDFILL
NEW BRAUNFELS, TEXAS

TWO (2) INSTALLED CATERPILLAR 3520 INTERNAL COMBUSTION ENGINES
(ENG1 & ENG2)

TITLE V PERMIT NUMBER: O-2373

PREPARED FOR:
WASTE MANAGEMENT OF TEXAS, INC.
Waste Management Renewable Energy

BY:

RMC ENVIRONMENTAL, INC. – CHICAGO REGIONAL OFFICE

REPORT CERTIFICATION

The sampling, analysis, and data collection performed for this report were carried out under my direction and supervision, and I hereby certify that the test report is authentic and accurate, to the best of my knowledge.

Date 4/19/2011

Signature

Rachel Chleborowicz, QSTI
Project Manager
RMC Environmental, Inc.

TABLE OF CONTENTS

1.0 PROJECT INFORMATION 1

1.1 COMPANY INFORMATION 1
1.2 TESTING FIRM INFORMATION 1
1.3 TEST INFORMATION 1

2.0 SOURCE IDENTIFICATION 1

2.1 FACILITY DESCRIPTION, PROCESS INFORMATION, AND EMISSION SOURCE DESCRIPTION 2

3.0 SUMMARY AND DISCUSSION OF RESULTS 2

4.0 POLLUTANTS AND TEST METHODS 3

5.0 TEST PROCEDURES AND RESULTS 3

5.1 SAMPLING PROCEDURES 3
5.11 VOLUMETRIC FLOW RATES 3
5.12 INSTRUMENTAL TEST EQUIPMENT AND PROCEDURES 6
5.13 INSTRUMENTAL ANALYTICAL DATA 7

6.0 EQUIPMENT CALIBRATION AND QUALITY ASSURANCE 7

APPENDIX A. TEST SUMMARY SHEETS ..... A

Emissions Summary

APPENDIX B. FIELD TEST DATA W/ INSTRUMENTAL TEST DATA ..... B

Method 1-4 Field Data
Flow Rate Determinations
Calibration Summaries
Instrumental Test Run Data
Reference Data Summary

APPENDIX C. TEST QA/ QC FORMS C

Calibration Gas Certificates of Analysis
Meterbox Calibrations

APPENDIX D. PROCESS DATA ..... D

APPENDIX E. RESUMES OF TEST PERSONNEL ..... E

1.0 PROJECT INFORMATION

1.1 Company Information

Name and Address:	Waste Management of Texas, Inc. Mesquite Creek Landfill 1000 Kohlenburg Road New Braunfels, Texas
Contact:	Mr. Philip Duncan
Telephone Number:	512-801-4374
Permit Number:	Title V Permit O-2373; Standard Air Permit for Plant 82411
Source Tested:	Two (2) installed 3520 Caterpillar Landfill Gas Engines SN: ENG1 - GZJ00444 & ENG2 - GZJ00445

1.2 Testing Firm Information

Name and Address:	RMC ENVIRONMENTAL, INC. 9226 North 2nd Street Machesney Park, Illinois 61115
Contact:	Rachel Chleborowicz
Telephone Number:	815-378-6150 Mobile RMCE@AirMonitoring.com / RMCEInc@aol.com

1.3 Test Information

Test Requested By:	WM Renewable Energy, LLC.	
Source Contact:	Mr. Vic Saufley	
Telephone Number:	713-328-7348	
Test Objective:	Title 40, Code of Federal Regulations, Part 60, Subpart JJJJ Compliance Testing and Title V Permit testing, Standard Permit for Electric Generating Units	
Test Methods:	EPA Methods 1-4, 3A, 7E, 10 and 25A/18	
Test Dates:	February 23, 2011	
Source Test Coordinators:	Mr. Philip Duncan	Waste Management of Texas, Inc.
Test Personnel:	Rachel Chleborowicz Andrew McDermand	RMCEInc RMCEInc
Laboratory Analysis:	Core Laboratories, Inc.	

2.0 SOURCE IDENTIFICATION

Name and Address:	Waste Management of Texas, Inc. Mesquite Creek Landfill 1000 Kohlenburg Road New Braunfels, Texas
Contact:	Mr. Philip Duncan
Telephone Number:	512-801-4374
Source Tested:	Two (2) installed 3520 Caterpillar Landfill Gas Engines SN: ENG1 - GZJ00444 & ENG2 - GZJ00445

Fuel:	Landfill Gas
Sampling Location Dimensions:	Height 12' ID – 15.5"
Sampling Location:	~ 60" Downstream and ~ 48" Upstream from any flow disturbance

- Senior Project Manager works directly with the site coordinator and the facility's operators during the testing to coordinate the testing. They are also responsible for operating and monitoring the instrumental test methods within the mobile test laboratory.
- The Site Coordinator is the facility's representative for the test program.

The individuals listed above account for nearly 35 years of accumulative experience in the stack testing industry. Their experience expands nearly every state in the United States. It also includes most source categories such as aerospace facilities, waste incinerators, hazardous waste incinerators, trash incinerators, medical waste incinerators, crematories, cement kilns, paper mills, steel mills, combined cycle power plants, simple cycle power plants, coal fired power plants, Waste-to-energy facilities, natural gas compressor stations, diesel engines, ethanol plants, petro-chemical facilities and oil refineries.

2.1 Facility Description, Process Information, and Emission Source Description

The Mesquite Creek Landfill consists of a municipal solid waste landfill and associated support systems and structures. Landfill gas is collected and then combusted by two (2) landfill gas-fired (LFG) Caterpillar 3520 engines/electric generator sets and a flare system. The facility is permitted for three engines, but, to date, only two have been installed. The landfill gas extraction system consists of gas extraction wells, which are spaced across the surface of the landfill. The wells are interconnected by a subsurface manifold system, which traverses the landfill. Each landfill gas extraction well is outfitted with a valve allowing the flow of gas to be individually controlled. The landfill gas collection system is equipped with centrifugal blowers, which feed the candlestick flares. In addition, the engine generators receive landfill gas through a set of compressor units.

A schematic of the engines is shown in **Figure 5.11-1**.

The engine testing was conducted while the unit is operated the at maximum capacity of 1600 kW (+/- 10%)

An EPA Method 1 data sheet for the engines is included in **Figure 5.11-3**. These and all measurements provided before the test team arrives on site were verified and included in the appendicies to this report.

3.0 SUMMARY AND DISCUSSION OF RESULTS

The compliance test results for Waste Management of Texas, Inc. – Mesquite Creek Landfill are shown in **Table 3-1**. The indicated pollutants are VOC/NMOC, CO and NOx emissions in units of the emission rates (lb/Hr, g/BHP-Hr and lb/Mw-Hr). The reference test data is enclosed in **Appendices A & B** and the corresponding process data collected from the engine operations screen and the on-site Gas Chromatograph (GC) are included in **Appendix D**.

This data is an average of the three one-hour test runs conducted on each engine. Each engine is rated for 2233 horsepower with ~1600 Kw of power produced. The testing was conducted at those levels.

TABLE 3-1. COMPLIANCE TEST RESULTS
February 23, 2011

Parameter	Result[1]	Permit Limit
Engine #2 – 2/23/11 (EPN/FIN: ENG2)		
Engine #2 – NOx g/BHP-Hr	0.57	30 TAC §117.2110 - 0.6 g NOx / BHP-Hr Subpart JJJJ Specification - 3.0 g NOx/BHP-Hr
NOx lb/Mw-Hr	1.78	Standard Permit No. 82411 - 1.9 lb/Mw-Hr
Engine #2 – CO g/BHP-Hr	2.58	Standard Permit No. 82411 - 3.0 g CO / BHP-Hr Subpart JJJJ Specification - 5.0 g CO/BHP-Hr
Engine #2 – VOC g/BHP-Hr	0.10	Standard Permit No. 82411 - 0.88 lb/Hr Subpart JJJJ Specification - 1.0 g VOC/BHP-Hr
Engine #1 – 2/23/11 (EPN/FIN: ENG1)		
Engine #1 – NOx g/BHP-Hr	0.58	30 TAC §117.2110 - 0.6 g NOx / BHP-Hr Subpart JJJJ Specification - 3.0 g NOx/BHP-Hr
NOx lb/Mw-Hr	1.81	Standard Permit No. 82411 - 1.9 lb/Mw-Hr
Engine #1 – CO g/BHP-Hr	2.54	Standard Permit No. 82411 - 3.0 g CO / BHP-Hr Subpart JJJJ Specification - 5.0 g CO/BHP-Hr
Engine #1 – VOC g/BHP-Hr	0.09	Standard Permit No. 82411 - 0.88 lb/Hr Subpart JJJJ Specification - 1.0 g VOC/BHP-Hr

[1]The procedures and calculations outlined in 40 CFR 60.4244 were followed for this test project.

4.0 POLLUTANTS AND TEST METHODS

Pollutant Tested:	NO_x	EPA Method 7E – Title 40 CFR 60, Appendix A
	CO	EPA Method 10 – Title 40 CFR 60, Appendix A
	VOC/NMOC	EPA Method 25A/18 – Title 40 CFR 60 Appendix A

5.0 TEST PROCEDURES AND RESULTS

5.1 Sampling Procedures

Testing was completed per EPA Test Methods 1, 2, 3A, 4, 7E, 10 and 25A/18 defined in Title 40 CFR Part 60, Appendix A.

5.11 Volumetric Flow Rates

RMCEINC determined the number and location of the traverse points for volumetric flow rate measurement according to the procedures outlined in EPA Method 1. When determining the location and number of sample points, RMCEINC took into account the number of sample ports, duct configuration, and location of upstream and downstream flow disturbances. **Figure 5.11-1** illustrates the engine and the port location. **Figure 5.11-3** provides the EPA Method 1 data for the engines.

The flue gas velocity and volumetric flow rate were determined according to the procedures of EPA Method 2. A Type S pitot tube with a Type K thermocouple was used to measure velocity pressure and stack gas temperature at each sample point. Each pitot tube conformed to the geometric specifications of EPA Method 2 and was assigned a coefficient of 0.84. An umbilical cord connected the pitot tube to the meter box inclined manometer and digital temperature readout. RMCEINC leak-checked the pitot tube prior to and after conducting the traverse.

RMCEINC determined the flue gas composition and molecular weight using EPA Methods 3A and 4 procedures. A schematic of the Method 1-4 sampling train is presented in **Figure 5.11-2**.

Figure 5.11-1 – Engine Schematic / Diagram.

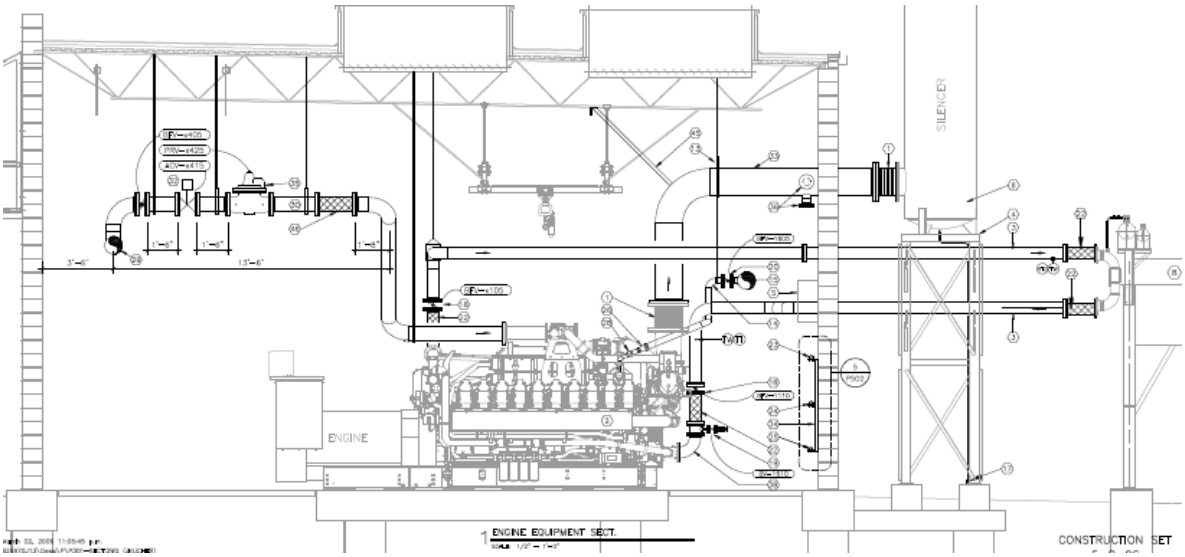

Stack Information

	Mesquite Creek – Engines
Shape of the test plane	Round
Internal diameter	15”
Source sampling system approximate height (AGL)	~ 15’
Reference Flow Sampling Ports (Est. Offset from North)	45° & 135°

Figure 5.11-2 – EPA Methods 1-4 Sampling Train Schematic / Diagram.

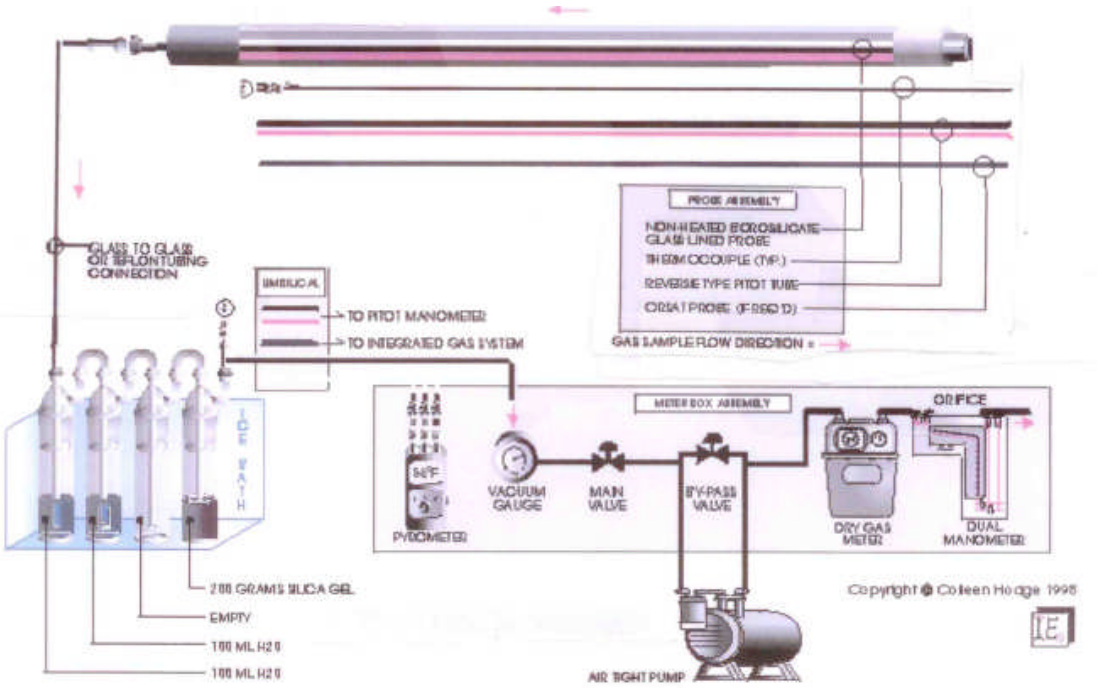

Figure 5.11-3 – EPA Method 1 – Engines 1 & 2

METHOD 1 - SAMPLE AND VELOCITY TRAVERSES FOR CIRCULAR SOURCES

Plant Name	Mesquite Creek	**Date**	02/23/11
Sampling Location	LFG Engines 1 & 2	**Project #**	2011-17001
Operator	RC	**# of Ports Available**	2
Stack Type	Circular	**# of Ports Used**	2
Stack Size	Small	**Port Inside Diameter**	3

Circular Stack or Duct Diameter			
Distance to Far Wall of Stack	(L_{fw})	21.00	in
Distance to Near Wall of Stack	(L_{nw})	6.00	in
(=Lfw - Lnw) **Diameter of Stack**	(D)	15.00	in
(=3.14(D/2/Cunits)2) **Area of Stack**	(A_s)	1.23	ft^2

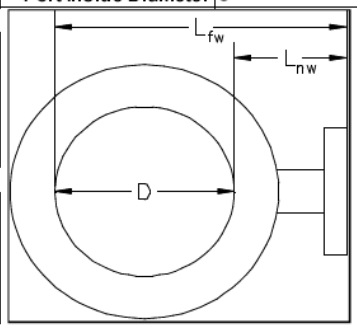

Distance from Port to Disturbances			
Distance Upstream	(B)	45.00	in
(=B/D) **Diameters Upstream**	(B_D)	3.00	diameters
Distance Downstream	(A)	105.00	in
(=A/D) **Diameters Downstream**	(A_D)	7.00	diameters

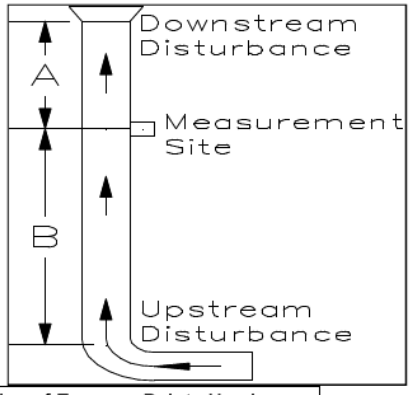

Number of Traverse Points Required			
Diameters to Flow Disturbance		Minimum Number of[1] Traverse Points	
Up Stream	Down Stream	Particulate Points	Velocity Points
2.00-4.99	0.50-1.24	24	16
5.00-5.99	1.25-1.49	20	16
6.00-6.99	1.50-1.74	16	12
7.00-7.99	1.75-1.99	12	12
>= 8.00	>=2.00	8 or 12[2]	8 or 12[2]
Upstream Spec		24	16
Downstream Spec		8	8
Traverse Pts Required		24	16

[1] Check Minimum Number of Points for the Upstream and Downstream conditions, then use the largest.
[2] 8 for Circular Stacks 12 to 24 inches
12 for Circular Stacks over 24 inches

Number of Traverse Points Used			
2	**Ports by**	8	**Across**
16	**Pts Used**	16	**Required**
☐	**Particulate**	☑	**Velocity**

Location of Traverse Points in Circular Stacks						
Traverse Point Number	(Fraction of Stack Diameter from Inside Wall to Traverse Point) Number of Traverse Points on a Diameter					
	2	4	6	8	10	12
1	.146	.067	.044	.032	.026	.021
2	.854	.250	.146	.105	.082	.067
3		.750	.296	.194	.146	.118
4		.933	.704	.323	.226	.177
5			.854	.677	.342	.250
6			.956	.806	.658	.356
7				.895	.774	.644
8				.968	.854	.750
9					.918	.823
10					.974	.882
11						.933
12						.979

Traverse Point Locations			
Traverse Point Number	**Fraction of Stack Diameter**	**Distance from Inside Wall**	**Distance Including Nipple Length**
		in	in
1	0.032	4/8	6 4/8
2	0.105	1 5/8	7 5/8
3	0.194	2 7/8	8 7/8
4	0.323	4 7/8	10 7/8
5	0.677	10 1/8	16 1/8
6	0.806	12 1/8	18 1/8
7	0.895	13 3/8	19 3/8
8	0.968	14 4/8	20 4/8
9			
10			
11			
12			

5.12 Instrumental Test Equipment and Procedures

The test program includes the measurement of exhaust gas concentrations of VOC, CO, NO_x, and O_2. RMCEINC used the procedures that conform to the requirements of Title 40 CFR, Part 60, Appendix A, Methods 1, 2, 3A, 4, 7E, 10 and 25A/18. Each of the three test runs included a minimum of one hour of continuous flue gas sampling.

Concentration measurements of O_2, CO, NOx and VOC, were made using the analyzers listed in **Table 5.12-1. Figure 5.13-1** is a schematic of the wet/dry extractive reference measurement gas sampling system used by RMCEINC. All components of the sampling system that contact the sample are stainless steel, glass, or Teflon.

RMCEINC uses a standard manual probe sampling system. The manual sampling probe uses a heated stainless steel tubing and 3-way valve to provide a means of conducting the three-point traverse and calibration checks. The probe assembly will be constructed of Type 316 stainless steel and may be heated electrically to maintain the sample temperature above the dew point of the stack gases or 250° F. At the Mesquite Creek Landfill, the exhaust stack temperatures are over 600 degrees. Therefore, due to the excessive heat, the sampling probe will not be externally heated. A length of heated Teflon tubing, heated to over 250° F, will connect the probe to a moisture removal chiller. The condensed portion of the sample is routed to the wet / dry extractive system for distribution to the dry NOx, CO, VOC and O_2/CO_2 analyzers.

Before the moisture removal system, a portion of the wet effluent is pulled off to serve the VOC analyzer. This analyzer requires the sample to be unconditioned which allows for the full VOC concentration in the sample to be analyzed. In order to obtain VOC (Non-Methane Organic Carbon) concentrations, an onsite GC will be employed to continuously monitor the methane concentration in the effluent. The methane concentration will then be subtracted from the total VOC concentration to provide an VOC result.

In addition to the EPA Method 18 testing for Methane, gas bombs were collected for BTU Content and ultimate analysis. The results were used to verify the constants in all calculations especially from gas flow to Kilowatt Hour output.

TABLE 5.11-1 REFERENCE METHOD ANALYZERS

Parameter	Analyzer	Analytical Technique	Instrument Span
NO_x	Thermo Environmental Instruments Model 42	Chemiluminescence	0-250, ppm
CO	Thermo Environmental Instruments Model 48	Gas Filter Correlation	0-1000, ppm
VOC / NMOC	VID Industries Model 220/200	FID / GC	0-1000/5000 ppm
O_2	Servomex 1440	Paramagnetic	0-21 %
CO_2	Servomex 1440	Paramagnetic	0-18 %

5.13 Instrumental Analytical Data

RMCEINC performed test runs to measures the flue gas for VOC/NMOC, NO_x and CO in terms of an emission rate (lb/BHP-Hr). A three-point (zero, mid-range, and high-range) analyzer calibration error check on each reference analyzer was performed before initiating the testing. This check is conducted after final calibration adjustments are made by injecting the calibration gases directly into each gas analyzer and recording the responses on the reference data acquisition system.

RMCEINC conducts zero and upscale calibration checks both before and after each test run in order to quantify measurement system calibration drift and sampling system bias. Upscale is either the low-, mid- or high-range gas, whichever most closely approximates the flue gas level. During these checks, the calibration gases are introduced into the sampling system through a 3-way valve assembly at the probe outlet so that the calibration gases are analyzed in the same manner as the flue gas samples.

RMCEINC conducted a three-point traverse of each stack as stipulated in 40 CFR 60, Appendix A, Method 7E. This traverse is conducted during the first run of each set of three for the engines. The percent O_2 and the ppm NO_X and CO were within the specifications of the section and therefore a single point was used for each test run

thereafter, this point was chosen to most accurately represent the mean of the three points tested during the stratification test.

RMCEINC recorded the reference analyzer measurements as 1-minute and 60-minute averages on its DAS. All test run concentration results were determined from the average gas concentrations measured during the run and adjusted based on the zero and upscale sampling system bias check results (Equation 7E-1 presented in Title 40 CFR Part 60, Method 7E, Section 8). The reference VOC/NMOC, CO and NO_x emission values in terms of pounds per hour and grams per break horsepower hour were computed from each test run average of adjusted, dry basis VOC/NMOC, CO, NO_x and percent O_2 using the Title 40 CFR Part 60 Appendix A Method 19.

Figure 5.13-1. Reference Method Gas Sampling System Diagram

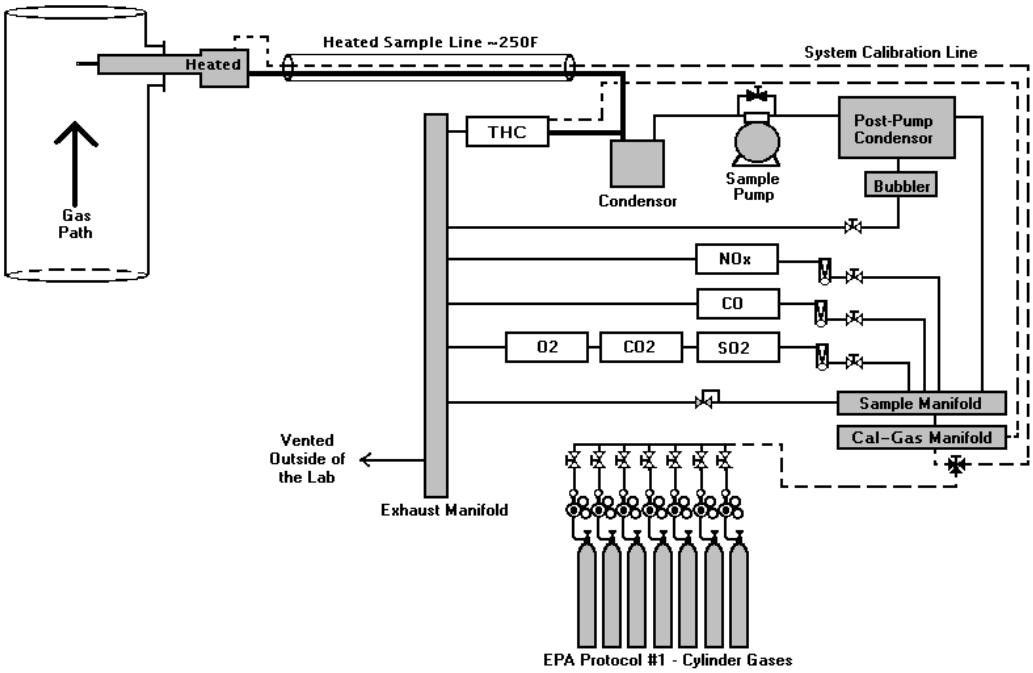

6.0 EQUIPMENT CALIBRATION AND QUALITY ASSURANCE

RMCEINC followed the calibration and quality assurance procedures of EPA Methods 1, 2, 3A, 4, 7E, 10 and 25/18 throughout the test program. The maintenance for our meterboxes, probes, analyzers and a majority of our other test equipment is performed off site by either Clean Air Engineering or Millenium Instruments. These companies ensure that our equipment is operating correctly and within the specification of the respective methods. All equipment is calibrated in accordance with the EPA Methods and guidelines.

The results of sampling system bias and calibration drift tests for each test run are calculated and presented in the test report. Cylinder gases used during the testing are certified to meet or exceed EPA Protocol 1 requirements. The meter box calibrations, pitot tube inspections, calibration gas certificates of analysis and the analyzer quality assurance checks are included in **Appendix C**.

RMCEINC uses computers throughout the test program. Spreadsheets and software programs are checked in our office for accuracy. Software used by RMCEINC is structured to eliminate human errors in data entry where possible by automating the process. When possible RMCEINC, inputs field data directly into the DAS system and eliminates the hand written field data sheets. These systems provide an accurate measurement of the raw test data

and are not used to modify or change test data in any manner. Equations used in these systems are taken directly from the CFR when possible and notations are provided if originated from an alternate source or customized in any manner.

APPENDIX A. TEST SUMMARY SHEETS

Emissions Summary

REFERENCE DATA SUMMARY

Company: WMRE Mesquite Creek
Source: Engine #1 & #2

Date: 2/23/2011
Project #: 2011-17001

CAL	RUN #	Test Duration 7:40 Start Time	End Time	O2-A %	CO2-A %	CO-A ppm	NOx-A ppm	VOC-A ppm	NMOC ppm	CH4-A ppm	CO-A	NOx-A	VOC-A lbs/mmBtu	NMOC	CH4-A	DSCFM
				DATA Link from the DATA Logger							As Propane					
					Engine #2								**Engine #2**			**Engine #1**
	1	2/23/2011 10:00	11:00	7.87	11.26	670.40	90.84	559.57	63.52	1615.20	0.735	0.164	0.968	0.030	0.766	4422.0
0:13	2	2/23/2011 11:13	12:13	7.48	11.26	668.20	91.90	582.53	62.08	1685.50	0.712	0.161	0.978	0.029	0.776	4299.0
0:12	3	2/23/2011 12:25	13:25	8.25	11.41	683.20	92.09	583.76	60.59	1690.70	0.772	0.171	1.040	0.030	0.826	4274.0
					Engine #1								**Engine #1**			**Engine #1**
0:45	4	2/23/2011 14:10	15:10	8.04	11.32	686.00	93.76	578.45	55.95	1679.40	0.763	0.171	1.014	0.027	0.807	4202.0
0:14	5	2/23/2011 15:24	16:24	8.10	11.31	682.00	97.08	596.85	30.56	1760.00	0.762	0.178	1.051	0.015	0.850	4238.0
0:16	6	2/23/2011 16:40	**17:40**	8.21	11.30	678.60	97.26	600.72	87.17	1715.00	0.765	0.180	1.067	0.042	0.836	4192.0
	7		18:46													
	8		19:52													
	9		20:58													
	10		22:04													
	11		23:10													
	12		0:16													
	13		1:22													
	14		2:28													
	15		3:34													
			AVERAGE	7.99	11.31	678.07	93.82	583.65	59.98	1690.97	0.7515	0.171	1.020	0.029	0.810	

	Start Time	End Time					VOC-A ppmw		NOx lb/Mw-Hr	CO-A	NOx-A		NMOC		CO-A	NOx-A	VOC-A lbs/Hr	NMOC	CH4	
			Wet based measurements corrected from DATA Logger							As Propane										
												g/HP-Hr								
							Engine #2										**Engine #2**			
1	2/23/2011 10:00	11:00					493.50		1.80	2.62	0.58		0.11		12.919	2.88	17.00	0.53	13.37	
2	2/23/2011 11:13	12:13					508.00		1.77	2.54	0.57		0.10		12.518	2.83	17.20	0.50	13.56	
3	2/23/2011 12:25	13:25					509.50		1.76	2.58	0.57		0.10		12.725	2.82	17.14	0.48	13.53	
							Engine #1										**Engine #1**			
4	2/23/2011 14:10	15:10					503.70		1.76	2.55	0.57		0.09		12.56	2.82	16.70	0.44	13.21	
5	2/23/2011 15:24	16:24					524.30		1.84	2.56	0.60		0.05		12.60	2.95	17.38	0.24	13.96	
6	2/23/2011 16:40	17:40					524.30		1.83	2.52	0.59		0.14		12.40	2.92	17.30	0.68	13.46	
7		18:46																		
8		19:52																		
9		20:58																		
10		22:04																		
11		23:10																		
12		0:16																		
13		1:22																		
14		2:28																		
15		3:34																		
		AVERAGE					510.55			2.55	0.58		0.10		12.56	2.87	17.14	0.47	13.54	

APPENDIX B. FIELD TEST DATA W/ INSTRUMENTAL TEST DATA

Method 1-4 Field Data

Flow Rate Determinations

Calibration Summaries

Instrumental Test Run Data

Reference Data Summary

METHOD 1 - SAMPLE AND VELOCITY TRAVERSES FOR CIRCULAR SOURCES

Plant Name	Mesquite Creek	**Date**	02/23/11
Sampling Location	LFG Engines 1 & 2	**Project #**	2011-17001
Operator	RC	**# of Ports Available**	2
Stack Type	Circular	**# of Ports Used**	2
Stack Size	Small	**Port Inside Diameter**	3

Circular Stack or Duct Diameter			
Distance to Far Wall of Stack	(L_{fw})	21.00	in
Distance to Near Wall of Stack	(L_{nw})	6.00	in
(=Lfw - Lnw) **Diameter of Stack**	(D)	15.00	in
(=3.14(D/2/Cunits)2) **Area of Stack**	(A_s)	1.23	ft^2

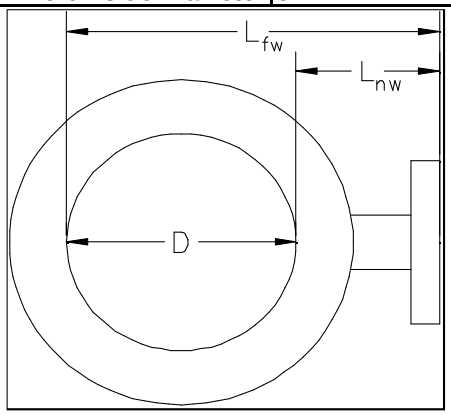

Distance from Port to Disturbances			
Distance Upstream	(B)	45.00	in
(=B/D) **Diameters Upstream**	(B_D)	3.00	diameters
Distance Downstream	(A)	105.00	in
(=A/D) **Diameters Downstream**	(A_D)	7.00	diameters

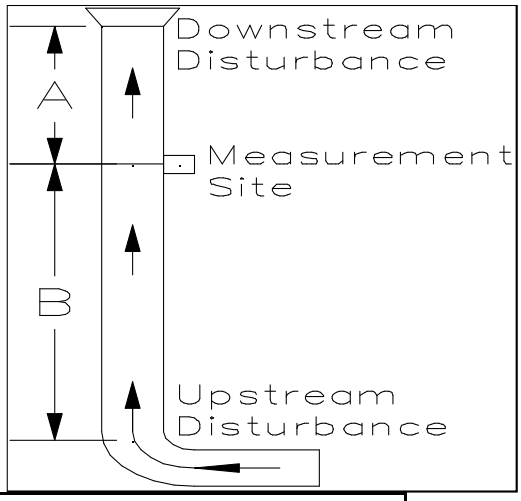

Number of Traverse Points Required			
Diameters to Flow Disturbance		**Minimum Number of[1] Traverse Points**	
Up Stream	**Down Stream**	**Particulate Points**	**Velocity Points**
2.00-4.99	0.50-1.24	24	16
5.00-5.99	1.25-1.49	20	16
6.00-6.99	1.50-1.74	16	12
7.00-7.99	1.75-1.99	12	12
>= 8.00	>=2.00	8 or 12[2]	8 or 12[2]
Upstream Spec		24	16
Downstream Spec		8	8
Traverse Pts Required		24	16

[1] Check Minimum Number of Points for the Upstream and Downstream conditions, then use the largest.

[2] 8 for Circular Stacks 12 to 24 inches
12 for Circular Stacks over 24 inches

Number of Traverse Points Used			
2	**Ports by**	8	**Across**
16	**Pts Used**	16	**Required**
☐	**Particulate**	☑	**Velocity**

Location of Traverse Points in Circular Stacks						
Traverse Point Number	(Fraction of Stack Diameter from Inside Wall to Traverse Point) Number of Traverse Points on a Diameter					
	2	4	6	8	10	12
1	.146	.067	.044	.032	.026	.021
2	.854	.250	.146	.105	.082	.067
3		.750	.296	.194	.146	.118
4		.933	.704	.323	.226	.177
5			.854	.677	.342	.250
6			.956	.806	.658	.356
7				.895	.774	.644
8				.968	.854	.750
9					.918	.823
10					.974	.882
11						.933
12						.979

Traverse Point Locations			
Traverse Point Number	**Fraction of Stack Diameter**	**Distance from Inside Wall**	**Distance Including Nipple Length**
		in	in
1	0.032	4/8	6 4/8
2	0.105	1 5/8	7 5/8
3	0.194	2 7/8	8 7/8
4	0.323	4 7/8	10 7/8
5	0.677	10 1/8	16 1/8
6	0.806	12 1/8	18 1/8
7	0.895	13 3/8	19 3/8
8	0.968	14 4/8	20 4/8
9			
10			
11			
12			

METHOD 4 RUN SUMMARY SHEET

Company: Waste Management - Mesquite Creek **Load:** 1600 kW
Source: Engine #2
Test Location: Exhaust Duct

Run:	**M4-R1**	**M4-R2**	**M4-R3**
Flow Runs:	1	2	3
Start Time:	2/23/2011 10:00	2/23/2011 11:15	2/23/2011 12:30
End Time:	2/23/2011 11:00	2/23/2011 12:15	2/23/2011 13:30

RUN DATA

Meter voume start (cu. ft.):	73.538	97.015	120.812
Meter volume finish (cu. ft.):	96.617	120.339	143.896
Meter calib. factor (Y):	1.0010	1.0010	1.0010
Barometric pressure (in. Hg):	29.76	29.76	29.92
Average Delta-H (in. H2O):	1.77	1.77	1.77
Gas meter temperature (deg F):	85.0	86.0	91.0
Sil-Gel total wt. H2O collected (grams):	9.6	5.3	5.5
Impinger total volume H2O collected (ml):	54	65	63

CALCULATED RESULTS

Gas volume sampled (DSCF)*:	22.359	22.546	22.230
Water vapor volume (SCF)*:	2.994	3.309	3.224
Moisture content (% volume):	**11.8**	**12.8**	**12.7**

* 68 deg F (20 deg C) - 29.92 in. Hg

VOLUMETRIC FLOW RATE DETERMINATION

Company: Waste Management - Mesquite Creek
Source: Engine #2
Test Location: Exhaust Duct

Conducted By: AM/RC

Load: 1600 kW
Run: 1
Start Time: 2/23/11 10:00
End Time: 2/23/11 11:00

TEST DATA

Test Point	Delta P (in H2O)	Temp. (Deg F)	Test Point	Delta P (in H2O)	Temp. (Deg F)
A-1	2.700	898	B-5	4.000	892
A-2	3.200	898	B-6	4.300	892
A-3	3.300	898	B-7	3.400	892
A-4	3.500	898	B-8	3.100	892
A-5	4.200	898			
A-6	3.900	898			
A-7	3.100	898			
A-8	2.500	898			
B-1	2.700	892			
B-2	3.200	892			
B-3	3.100	892			
B-4	3.600	892			

Duct Area:	188.7	(A)	sq. inches
Barometric Pressure:	29.76	(Pbar)	inches Hg
Static Pressure:	-4.30	(PG)	inches H2O
Pitot Tube Coefficient:	0.84	(Cp)	
Percent O2:	7.9	% O2	
Percent CO2:	11.3	% CO2	
Percent Nitrogen:	80.9	% N2	
Percent Moisture:	11.8	$\%H_20$	
Average Delta P:	3.36		inches H2O
Root Mean Sq. Delta P:	3.34	(Pavg)	inches H2O
Mean Temperature:	895.0	(Ts)	Degrees F
Number Of Traverse Points:	16		

CALCULATIONS

DRY MOLE FRACTION OF STACK GAS: Mfd = 1 - ($\%H_2O$ / 100)	Mfd =	0.882	
ABSOLUTE STACK GAS PRESSURE: Ps = Pbar + (Pg / 13.6)	Ps =	29.44	in. Hg
DRY MOLECULAR WEIGHT OF STACK GAS: Md = 0.44 ($\%CO_2$) + 0.32 ($\%O_2$) + 0.28 ($\%N_2$	Md =	30.12	lb/lb-mole
WET MOLECULAR WEIGHT OF STACK GAS: Ms = (Md)(Mfd) + 0.18 ($\%H_2O$)	Ms =	28.69	lb/lb-mole
AVERAGE STACK GAS VELOCITY: Vs = 85.49(Cp) X {(Pavg)(Ts + 460)/[(Ps)(Ms)]}$^{\wedge 0.5}$	Vs =	166.3	ft/sec
DRY VOLUMETRIC FLOW RATE: Qsd = 7.353(60)(Mfd)(Vs)(A)(Ps) / (Ts + 460)	Qsd =	4,422	DSCFM (DRY)
WET VOLUMETRIC FLOW RATE: Qsw = Qsd / Mfd	Qaw =	5,013.8	SCFM (WET)

VOLUMETRIC FLOW RATE DETERMINATION

Company: Waste Management - Mesquite Creek
Source: Engine #2
Test Location: Exhaust Duct

Conducted By: AM/RC

Load: 1600 kW
Run: 2
Start Time: 2/23/11 11:15
End Time: 2/23/11 12:15

TEST DATA

Test Point	Delta P (in H2O)	Temp. (Deg F)	Test Point	Delta P (in H2O)	Temp. (Deg F)
A-1	2.500	902	B-5	4.200	899
A-2	2.600	902	B-6	4.100	899
A-3	2.800	902	B-7	3.700	899
A-4	3.200	902	B-8	2.900	899
A-5	3.500	902			
A-6	3.700	902			
A-7	4.000	902			
A-8	2.900	902			
B-1	2.500	899			
B-2	2.900	899			
B-3	3.000	899			
B-4	3.400	899			

Duct Area:	188.7	(A)	sq. inches
Barometric Pressure:	29.76	(Pbar)	inches Hg
Static Pressure:	-3.20	(PG)	inches H2O
Pitot Tube Coefficient:	0.84	(Cp)	
Percent O2:	7.5	% O2	
Percent CO2:	11.3	% CO2	
Percent Nitrogen:	81.3	% N2	
Percent Moisture:	12.8	$\%H_20$	
Average Delta P:	3.24		inches H2O
Root Mean Sq. Delta P:	3.22	(Pavg)	inches H2O
Mean Temperature:	900.5	(Ts)	Degrees F
Number Of Traverse Points:	16		

CALCULATIONS

DRY MOLE FRACTION OF STACK GAS: Mfd = 1 - ($\%H_2O$ / 100)	Mfd =	0.872	
ABSOLUTE STACK GAS PRESSURE: Ps = Pbar + (Pg / 13.6)	Ps =	29.52	in. Hg
DRY MOLECULAR WEIGHT OF STACK GAS: Md = 0.44 ($\%CO_2$) + 0.32 ($\%O_2$) + 0.28 ($\%N_2$	Md =	30.10	lb/lb-mole
WET MOLECULAR WEIGHT OF STACK GAS: Ms = (Md)(Mfd) + 0.18 ($\%H_2O$)	Ms =	28.55	lb/lb-mole
AVERAGE STACK GAS VELOCITY: Vs = 85.49(Cp) X {(Pavg)(Ts + 460)/[(Ps)(Ms)]}$^{\wedge 0.5}$	Vs =	163.7	ft/sec
DRY VOLUMETRIC FLOW RATE: Qsd = 7.353(60)(Mfd)(Vs)(A)(Ps) / (Ts + 460)	Qsd =	4,299	DSCFM (DRY)
WET VOLUMETRIC FLOW RATE: Qsw = Qsd / Mfd	Qaw =	4,929.6	SCFM (WET)

VOLUMETRIC FLOW RATE DETERMINATION

Company: Waste Management - Mesquite Creek
Source: Engine #2
Test Location: Exhaust Duct

Conducted By: AM/RC

Load: 1600 kW
Run: 3
Start Time: 2/23/11 12:30
End Time: 2/23/11 13:30

TEST DATA

Test Point	Delta P (in H2O)	Temp. (Deg F)	Test Point	Delta P (in H2O)	Temp. (Deg F)
A-1	2.300	913	B-5	4.100	911
A-2	2.600	913	B-6	4.000	911
A-3	2.900	913	B-7	3.500	911
A-4	3.100	913	B-8	2.700	911
A-5	3.800	913			
A-6	4.100	913			
A-7	4.000	913			
A-8	2.900	913			
B-1	3.100	911			
B-2	2.500	911			
B-3	2.800	911			
B-4	3.300	911			

Duct Area:	188.7	(A)	sq. inches
Barometric Pressure:	29.76	(Pbar)	inches Hg
Static Pressure:	-2.70	(PG)	inches H2O
Pitot Tube Coefficient:	0.84	(Cp)	
Percent O2:	8.3	% O2	
Percent CO2:	11.4	% CO2	
Percent Nitrogen:	80.3	% N2	
Percent Moisture:	12.7	$\%H_20$	
Average Delta P:	3.23		inches H2O
Root Mean Sq. Delta P:	3.20	(Pavg)	inches H2O
Mean Temperature:	912.0	(Ts)	Degrees F
Number Of Traverse Points:	16		

CALCULATIONS

DRY MOLE FRACTION OF STACK GAS: Mfd = 1 - ($\%H_2O$ / 100)	Mfd =	0.873	
ABSOLUTE STACK GAS PRESSURE: Ps = Pbar + (Pg / 13.6)	Ps =	29.56	in. Hg
DRY MOLECULAR WEIGHT OF STACK GAS: Md = 0.44 ($\%CO_2$) + 0.32 ($\%O_2$) + 0.28 ($\%N_2$	Md =	30.16	lb/lb-mole
WET MOLECULAR WEIGHT OF STACK GAS: Ms = (Md)(Mfd) + 0.18 ($\%H_2O$)	Ms =	28.62	lb/lb-mole
AVERAGE STACK GAS VELOCITY: Vs = 85.49(Cp) X {(Pavg)(Ts + 460)/[(Ps)(Ms)]}$^{\wedge 0.5}$	Vs =	163.7	ft/sec
DRY VOLUMETRIC FLOW RATE: Qsd = 7.353(60)(Mfd)(Vs)(A)(Ps) / (Ts + 460)	Qsd =	4,274	DSCFM (DRY)
WET VOLUMETRIC FLOW RATE: Qsw = Qsd / Mfd	Qaw =	4,893.9	SCFM (WET)

METHOD 4 RUN SUMMARY SHEET

Company: Waste Management - Mesquite Creek **Load:** 1600 kW
Source: Engine #1
Test Location: Exhaust Duct

Run:	**M4-R1**	**M4-R2**	**M4-R3**
Flow Runs:	1	2	3
Start Time:	2/23/2011 14:10	2/23/2011 15:25	2/23/2011 16:39
End Time:	2/23/2011 15:10	2/23/2011 16:25	2/23/2011 17:39

RUN DATA

Meter voume start (cu. ft.):	144.157	167.803	191.279
Meter volume finish (cu. ft.):	167.377	191.114	214.383
Meter calib. factor (Y):	1.0010	1.0010	1.0010
Barometric pressure (in. Hg):	29.76	29.76	29.76
Average Delta-H (in. H2O):	1.77	1.77	1.77
Gas meter temperature (deg F):	93.0	95.0	99.0
Sil-Gel total wt. H2O collected (grams):	5.9	5.2	5.7
Impinger total volume H2O collected (ml):	64	60	62

CALCULATED RESULTS

Gas volume sampled (DSCF)*:	22.162	22.168	21.814
Water vapor volume (SCF)*:	3.290	3.069	3.187
Moisture content (% volume):	**12.9**	**12.2**	**12.7**

* 68 deg F (20 deg C) - 29.92 in. Hg

VOLUMETRIC FLOW RATE DETERMINATION

Company: Waste Management - Mesquite Creek
Source: Engine #1
Test Location: Exhaust Duct

Conducted By: AM/RC

Load: 1600 kW
Run: 1
Start Time: 2/23/2011 14:10
End Time: 2/23/2011 15:10

TEST DATA

Test Point	Delta P (in H2O)	Temp. (Deg F)	Test Point	Delta P (in H2O)	Temp. (Deg F)
A-1	2.200	898	B-5	3.400	910
A-2	2.500	898	B-6	4.100	910
A-3	2.700	898	B-7	3.400	910
A-4	3.200	898	B-8	2.900	910
A-5	3.300	898			
A-6	3.900	898			
A-7	4.000	898			
A-8	3.300	898			
B-1	2.700	910			
B-2	2.600	910			
B-3	2.800	910			
B-4	2.900	910			

Duct Area:	188.7	(A)	sq. inches
Barometric Pressure:	29.76	(Pbar)	inches Hg
Static Pressure:	-3.20	(PG)	inches H2O
Pitot Tube Coefficient:	0.84	(Cp)	
Percent O2:	8.0	% O2	
Percent CO2:	11.3	% CO2	
Percent Nitrogen:	80.6	% N2	
Percent Moisture:	12.9	$\%H_20$	
Average Delta P:	3.12		inches H2O
Root Mean Sq. Delta P:	3.10	(Pavg)	inches H2O
Mean Temperature:	904.0	(Ts)	Degrees F
Number Of Traverse Points:	16		

CALCULATIONS

DRY MOLE FRACTION OF STACK GAS: Mfd = 1 - ($\%H_2O$ / 100)	Mfd =	0.871	
ABSOLUTE STACK GAS PRESSURE: Ps = Pbar + (Pg / 13.6)	Ps =	29.52	in. Hg
DRY MOLECULAR WEIGHT OF STACK GAS: Md = 0.44 ($\%CO_2$) + 0.32 ($\%O_2$) + 0.28 ($\%N_2$	Md =	30.13	lb/lb-mole
WET MOLECULAR WEIGHT OF STACK GAS: Ms = (Md)(Mfd) + 0.18 ($\%H_2O$)	Ms =	28.56	lb/lb-mole
AVERAGE STACK GAS VELOCITY: Vs = 85.49(Cp) X {(Pavg)(Ts + 460)/[(Ps)(Ms)]}$^{\wedge 0.5}$	Vs =	160.7	ft/sec
DRY VOLUMETRIC FLOW RATE: Qsd = 7.353(60)(Mfd)(Vs)(A)(Ps) / (Ts + 460)	Qsd =	4,202	DSCFM (DRY)
WET VOLUMETRIC FLOW RATE: Qsw = Qsd / Mfd	Qaw =	4,825.8	KSCFH (WET)
WET VOLUMETRIC FLOW RATE: Qsw = Qsd / Mfd / 60	Qaw =	80.4	KSCFM (WET)

VOLUMETRIC FLOW RATE DETERMINATION

Company: Waste Management - Mesquite Creek
Source: Engine #1
Test Location: Exhaust Duct

Conducted By: AM/RC

Load: 1600 kW
Run: 2
Start Time: 2/23/2011 15:25
End Time: 2/23/2011 16:25

TEST DATA

Test Point	Delta P (in H2O)	Temp. (Deg F)	Test Point	Delta P (in H2O)	Temp. (Deg F)
A-1	2.400	913	B-5	3.800	911
A-2	2.700	913	B-6	4.000	911
A-3	2.800	913	B-7	3.300	911
A-4	3.200	913	B-8	2.800	911
A-5	3.700	913			
A-6	4.200	913			
A-7	3.600	913			
A-8	3.200	913			
B-1	2.600	911			
B-2	2.300	911			
B-3	2.700	911			
B-4	3.200	911			

Duct Area:	188.7	(A)	sq. inches
Barometric Pressure:	29.76	(Pbar)	inches Hg
Static Pressure:	-4.30	(PG)	inches H2O
Pitot Tube Coefficient:	0.84	(Cp)	
Percent O2:	8.1	% O2	
Percent CO2:	11.3	% CO2	
Percent Nitrogen:	80.6	% N2	
Percent Moisture:	12.2	$\%H_20$	
Average Delta P:	3.16		inches H2O
Root Mean Sq. Delta P:	3.13	(Pavg)	inches H2O
Mean Temperature:	912.0	(Ts)	Degrees F
Number Of Traverse Points:	16		

CALCULATIONS

DRY MOLE FRACTION OF STACK GAS: Mfd = 1 - ($\%H_2O$ / 100)	Mfd =	0.878	
ABSOLUTE STACK GAS PRESSURE: Ps = Pbar + (Pg / 13.6)	Ps =	29.44	in. Hg
DRY MOLECULAR WEIGHT OF STACK GAS: Md = 0.44 ($\%CO_2$) + 0.32 ($\%O_2$) + 0.28 ($\%N_2$	Md =	30.13	lb/lb-mole
WET MOLECULAR WEIGHT OF STACK GAS: Ms = (Md)(Mfd) + 0.18 ($\%H_2O$)	Ms =	28.66	lb/lb-mole
AVERAGE STACK GAS VELOCITY: Vs = 85.49(Cp) X {(Pavg)(Ts + 460)/[(Ps)(Ms)]}$^{\wedge 0.5}$	Vs =	162.0	ft/sec
DRY VOLUMETRIC FLOW RATE: Qsd = 7.353(60)(Mfd)(Vs)(A)(Ps) / (Ts + 460)	Qsd =	4,238	DSCFM (DRY)
WET VOLUMETRIC FLOW RATE: Qsw = Qsd / Mfd	Qaw =	4,824.9	KSCFH (WET)
WET VOLUMETRIC FLOW RATE: Qsw = Qsd / Mfd / 60	Qaw =	80.4	KSCFM (WET)

VOLUMETRIC FLOW RATE DETERMINATION

Company: Waste Management - Mesquite Creek
Source: Engine #1
Test Location: Exhaust Duct

Conducted By: AM/RC

Load: 1600 kW
Run: 3
Start Time: 2/23/2011 16:39
End Time: 2/23/2011 17:39

TEST DATA

Test Point	Delta P (in H2O)	Temp. (Deg F)	Test Point	Delta P (in H2O)	Temp. (Deg F)
A-1	2.300	914	B-5	3.700	905
A-2	2.600	914	B-6	3.900	905
A-3	2.700	914	B-7	3.500	905
A-4	2.900	914	B-8	2.900	905
A-5	3.300	914			
A-6	3.700	914			
A-7	4.100	914			
A-8	3.600	914			
B-1	2.900	905			
B-2	2.100	905			
B-3	2.500	905			
B-4	3.300	905			

Duct Area:	188.7	(A)	sq. inches
Barometric Pressure:	29.76	(Pbar)	inches Hg
Static Pressure:	-5.00	(PG)	inches H2O
Pitot Tube Coefficient:	0.84	(Cp)	
Percent O2:	8.1	% O2	
Percent CO2:	11.3	% CO2	
Percent Nitrogen:	80.6	% N2	
Percent Moisture:	12.7	$\%H_20$	
Average Delta P:	3.13		inches H2O
Root Mean Sq. Delta P:	3.10	(Pavg)	inches H2O
Mean Temperature:	909.5	(Ts)	Degrees F
Number Of Traverse Points:	16		

CALCULATIONS

DRY MOLE FRACTION OF STACK GAS: Mfd = 1 - ($\%H_2O$ / 100)	Mfd =	0.873	
ABSOLUTE STACK GAS PRESSURE: Ps = Pbar + (Pg / 13.6)	Ps =	29.39	in. Hg
DRY MOLECULAR WEIGHT OF STACK GAS: Md = 0.44 ($\%CO_2$) + 0.32 ($\%O_2$) + 0.28 ($\%N_2$	Md =	30.13	lb/lb-mole
WET MOLECULAR WEIGHT OF STACK GAS: Ms = (Md)(Mfd) + 0.18 ($\%H_2O$)	Ms =	28.59	lb/lb-mole
AVERAGE STACK GAS VELOCITY: Vs = 85.49(Cp) X {(Pavg)(Ts + 460)/[(Ps)(Ms)]}$^{\wedge 0.5}$	Vs =	161.4	ft/sec
DRY VOLUMETRIC FLOW RATE: Qsd = 7.353(60)(Mfd)(Vs)(A)(Ps) / (Ts + 460)	Qsd =	4,192	DSCFM (DRY)
WET VOLUMETRIC FLOW RATE: Qsw = Qsd / Mfd	Qaw =	4,804.7	KSCFH (WET)
WET VOLUMETRIC FLOW RATE: Qsw = Qsd / Mfd / 60	Qaw =	80.1	KSCFM (WET)

CEM Traverse Points

Company: WMRE Mesquite Creek

Date: 2/23/2011

Sampling Location: Engine #1 & #2 - Exhaust Duct

Project #: 2011-17001

Stack Dia. *(in)*	**Nipple** *(in)*
15.5	1

Stratification	N
Wet Scrubber	N
Two Gas Streams	N
Dia. < 2.4 Meters	Y

Select Short Traverse: Y

SHORT Traverse not allowed

STANDARD TRAVERSE MEASUREMENTS

Traverse Points	*Requirement Dist. from Inside Wall*	Length (ft-in)
1	*16.7%*	0' 3-2/4"
2	*50.0%*	0' 8-3/4"
3	*83.3%*	1' 2"

SHORT TRAVERSE MEASUREMENTS

Traverse Points	*Requirement Dist. from Inside Wall*	Length (ft-in)
1	*0.4 m*	
2	*1.2 m*	
3	*2.0 m*	

STANDARD Traverse Used

Distance of Traverse Points From Inside Wall

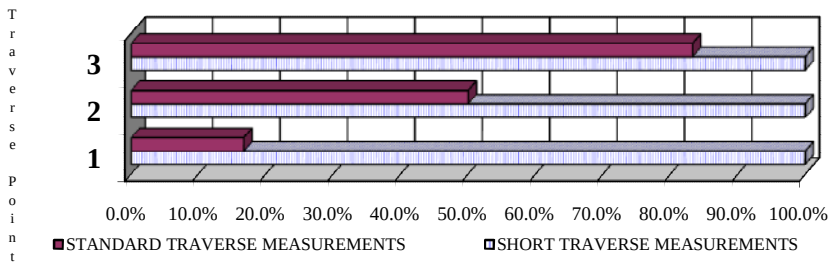

Calibration Error Test at Run 1 . STRATA Version 2.01

Operator: RMC Environmental, Inc.
Plant Name: WM-Mesquite Creek
Location: Eng 1 & 2 Testing

Reference Cylinder Numbers

	Zero	Low-range	Mid-range	High-range
O2-A	CC157065		CC179563	CC147760
CO2-A	CC157065		CC179563	CC147760
CO-A	SG914987	CC10309	CC10518	SG9198829
NOx-A	XC001240B	CC86991	CC208529	CC177437
VOC-A	CC179563	CC171154	SG9128607	CC21153
CH4-A	XC001240B	ALM011625	ALM033374	ALM059469

Date/Time 2/23/2011 9:00:37 PASSED

Analyte	O2-A	CO2-A	CO-A	NOx-A	VOC-A	CH4-A
Units	%	%	%	ppm	ppm	ppm
Zero Ref Cyl	0.00	0.00	0.00	0.00	0.00	0.00
Zero Avg	0.24	0.05	6.10	4.81	4.40	22.00
Zero Error%	1.20	0.30	0.60	1.90	0.40	0.40
Low Ref Cyl			255.80	51.34	300.20	1510.00
Low Avg			248.40	52.69	300.40	1600.00
Low Error%			0.70	0.50	0.00	1.80
Mid Ref Cyl	12.48	9.44	502.80	119.20	499.20	2540.00
Mid Avg	12.63	9.34	499.50	118.63	507.40	2536.40
Mid Error%	0.70	0.60	0.30	0.20	0.80	0.10
High Ref Cyl	20.85	16.98	1004.00	256.90	842.90	4540.00
High Avg	20.65	16.98	997.50	257.38	842.40	4560.10
High Error%	0.90	0.00	0.60	0.20	0.00	0.40

Initial System Bias Check for Run 1 . STRATA Version 2.01

Operator: RMC Environmental, Inc.
Plant Name: WM-Mesquite Creek
Location: Eng 1 & 2 Testing

Reference Cylinder Numbers

	Zero	Span
O2-A	CC208529	CC179563
CO2-A	CC208529	CC179563
CO-A	CC208529	CC10518
NOx-A	CC179563	CC208529
VOC-A	CC208529	SG9128607
CH4-A	CC208529	ALM033374

Date/Time 2/23/2011 9:32:22 PASSED

Analyte	O2-A	CO2-A	CO-A	NOx-A	VOC-A	CH4-A
Units	%	%	%	ppm	ppm	ppm
Zero Ref Cyl	0.00	0.00	0.00	0.00	0.00	0.00
Zero Cal	0.24	0.05	6.10	4.81	4.40	22.00
Zero Avg	0.40	0.07	6.10	12.36	1.90	1.80
Zero Bias%	0.80	0.10	0.00	3.00	0.30	0.40
Zero Drift%						
Span Ref Cyl	12.48	9.44	502.80	119.20	499.20	2540.00
Span Cal	12.63	9.34	499.50	118.63	507.40	2536.40
Span Avg	12.31	9.26	488.80	119.04	514.50	2477.80
Span Bias%	1.50	0.50	1.10	0.20	0.70	1.20
Span Drift%						

Test Run 1 Begin. STRATA Version 2.01
Operator: RMC Environmental, Inc.
Plant Name: WM-Mesquite Creek
Location: Eng 2 Testing

		O2-A	CO2-A	CO-A	NOx-A	VOC-A	CH4-A
		%	%	%	ppm	ppm	ppm
Begin calculating run averages							
2/23/2011	10:01:02	8.041	11.133	656.3	90.57	503.2	1707.5
2/23/2011	10:02:01	8.023	11.146	663.1	92.31	487.5	1748
2/23/2011	10:03:01	8.035	11.135	662.6	92.96	496	1743.1
2/23/2011	10:04:00	8.023	11.149	661	92.2	503.7	1763.9
2/23/2011	10:05:02	8.024	11.144	665.4	93.98	496.8	1739.6
2/23/2011	10:06:01	8.027	11.149	664.3	93.69	494.7	1766.9
2/23/2011	10:07:01	8.044	11.135	661.7	92.85	503.1	1709.3
2/23/2011	10:08:00	8.036	11.142	657.1	91.44	496.4	1594.9
2/23/2011	10:09:02	8.013	11.16	662.1	92.36	492.7	1558.6
2/23/2011	10:10:01	8.031	11.147	667	94.67	499	1590.6
2/23/2011	10:11:01	8.043	11.137	657.7	91.36	500.5	1561
2/23/2011	10:12:00	8.03	11.146	657.1	90.76	496	1585
2/23/2011	10:13:02	8.037	11.144	655	90.23	501.8	1591.2
2/23/2011	10:14:01	8.023	11.155	659.3	91.78	499.7	1598.4
2/23/2011	10:15:01	8.04	11.144	661.7	92.3	503.4	1575.9
2/23/2011	10:16:00	8.034	11.147	654.7	89.6	501.2	1600.7
2/23/2011	10:17:02	8.019	11.159	662	92.95	496.6	1571.6
2/23/2011	10:18:02	8.035	11.148	662.1	93.03	505.8	1584
2/23/2011	10:19:01	8.025	11.154	660.6	92.24	498.5	1579.9
2/23/2011	10:20:01	8.043	11.142	667	94.39	498.3	1581.6
Begin Traverse							
2/23/2011	10:21:00	8.015	11.165	659	90.85	482	1549.3
2/23/2011	10:22:02	8.021	11.163	666.2	93.92	485.3	1626.5
2/23/2011	10:23:01	8.029	11.157	664.8	94.35	494	1626.8
2/23/2011	10:24:01	8.022	11.158	659.8	91.18	491.1	1612.2
2/23/2011	10:25:00	8.033	11.152	664.8	92.71	487.3	1600.4
2/23/2011	10:26:02	8.019	11.162	663.4	92.25	490	1603.4
2/23/2011	10:27:01	8.04	11.146	662.7	92.79	492.1	1634.9
2/23/2011	10:28:00	8.025	11.157	656.5	90.66	490.3	1573.5
2/23/2011	10:29:02	8.022	11.16	663.9	92.91	484.7	1589.5
2/23/2011	10:30:01	8.031	11.153	662.7	92.21	485	1585.7
2/23/2011	10:31:01	8.019	11.166	662.7	92.9	493.5	1614.1
2/23/2011	10:32:00	8.016	11.167	664.5	93.31	498.4	1648.3
2/23/2011	10:33:02	8.028	11.156	660.5	92.01	503	1603.3
2/23/2011	10:34:02	8.006	11.174	663.8	93.11	487.6	1589.8
2/23/2011	10:35:01	8.003	11.174	672.9	97.06	483.9	1595.3
2/23/2011	10:36:01	8.02	11.161	666.7	94	489.5	1632.8
2/23/2011	10:37:00	8.012	11.168	662.4	92.2	491.2	1573.8
2/23/2011	10:38:02	8.011	11.172	667.8	94	493.7	1598
2/23/2011	10:39:01	8.017	11.157	664.4	93.35	486.3	1602.8
2/23/2011	10:40:00	8.012	11.166	661.6	91.79	492.5	1628.9
Begin Traverse							
2/23/2011	10:41:02	8.015	11.165	666.4	94.04	494	1577.8

2/23/2011	10:42:02	8.037	11.147	661	91.92	497.9	1618
2/23/2011	10:43:01	8.028	11.158	660.6	90.93	484.4	1602.4
2/23/2011	10:44:00	8.029	11.155	662	91.28	489.3	1624.2
2/23/2011	10:45:02	8.015	11.169	660.5	90.43	493.9	1586.5
2/23/2011	10:46:01	8.017	11.162	665.5	93	495.5	1642.2
2/23/2011	10:47:01	8.013	11.169	662.6	91.97	490.1	1605.7
2/23/2011	10:48:02	8.03	11.161	662.7	91.75	496.9	1581.9
2/23/2011	10:49:02	8.012	11.17	657.8	89.55	490.4	1613.8
2/23/2011	10:50:01	8.004	11.169	664.7	92.4	487.4	1602.5
2/23/2011	10:51:02	8.002	11.172	663.8	92.48	488.4	1578.9
2/23/2011	10:52:02	8.015	11.156	662.9	92.47	496.3	1625.1
2/23/2011	10:53:01	8.012	11.16	662.3	91.57	489	1611.2
2/23/2011	10:54:00	8.007	11.165	663.7	92.17	486	1602.7
2/23/2011	10:55:02	8.006	11.167	665.7	92.7	489.9	1600.2
2/23/2011	10:56:01	8.008	11.165	665.2	93.12	484.3	1571
2/23/2011	10:57:01	8.022	11.159	662.1	91.88	495.3	1618.1
2/23/2011	10:58:02	8.013	11.167	661.1	91.27	499.8	1622
2/23/2011	10:59:01	8.007	11.172	668	93.16	492.7	1586.6
2/23/2011	11:00:01	8.023	11.155	664.8	92.19	491.5	1600.9
Average of Test Run		O2-A	CO2-A	CO-A	NOx-A	VOC-A	CH4-A
		%	%	%	ppm	ppm	ppm
2/23/2011	11:00:01	8.022	11.157	662.5	92.39	493.5	1615.2

Test Run 1 End

Final System Bias Check for Run 1 . STRATA Version 2.01

Operator: RMC Environmental, Inc.
Plant Name: WM-Mesquite Creek
Location: Eng 2 Testing

Reference Cylinder Numbers

	Zero	Span
O2-A	CC208529	CC179563
CO2-A	CC208529	CC179563
CO-A	CC208529	CC10518
NOx-A	CC179563	CC208529
VOC-A	CC208529	SG9128607
CH4-A	CC208529	ALM033374

Date/Time 2/23/2011 11:08:59 PASSED

Analyte	O2-A	CO2-A	CO-A	NOx-A	VOC-A	CH4-A
Units	%	%	%	ppm	ppm	ppm
Zero Ref Cyl	0.00	0.00	0.00	0.00	0.00	0.00
Zero Cal	0.24	0.05	6.10	4.81	4.40	22.00
Zero Avg	0.69	0.08	6.40	10.73	1.80	1.30
Zero Bias%	2.10	0.10	0.00	2.40	0.30	0.40
Zero Drift%	1.40	0.10	0.00	-0.70	0.00	0.00
Span Ref Cyl	12.48	9.44	502.80	119.20	499.20	2540.00
Span Cal	12.63	9.34	499.50	118.63	507.40	2536.40
Span Avg	12.50	9.48	508.10	116.23	503.00	2449.40
Span Bias%	0.60	0.80	0.90	1.00	0.40	1.70
Span Drift%	0.90	1.20	1.90	-1.10	-1.10	-0.60
Ini Zero Avg	0.40	0.07	6.10	12.36	1.90	1.80
Ini Span Avg	12.31	9.26	488.80	119.04	514.50	2477.80
Run Avg	8.02	11.16	662.50	92.39	493.50	1615.20
Co	0.55	0.07	6.20	11.55	1.80	1.50
Cm	12.41	9.37	498.50	117.64	508.70	2463.60
Correct Avg	7.87	11.26	670.40	90.84	484.20	1662.30

Test Run 2 Begin. STRATA Version 2.01
Operator: RMC Environmental, Inc.
Plant Name: WM-Mesquite Creek
Location: Eng 2 Testing

		O2-A	CO2-A	CO-A	NOx-A	VOC-A	CH4-A
		%	%	%	ppm	ppm	ppm
Begin calculating run averages							
2/23/2011	11:14:02	7.852	11.133	658.9	90.71	503.7	1635.5
2/23/2011	11:15:01	7.845	11.147	664.8	92.03	495.1	1691.8
2/23/2011	11:16:01	7.855	11.135	662.9	91.87	504.8	1688.2
2/23/2011	11:17:00	7.843	11.145	662.4	90.45	500.8	1567.2
2/23/2011	11:18:02	7.857	11.137	667.6	92.58	505.5	1638.8
2/23/2011	11:19:01	7.839	11.151	661.4	90.83	498.4	1641.7
2/23/2011	11:20:01	7.86	11.134	666.4	93.6	508.5	1674.1
2/23/2011	11:21:00	7.841	11.147	665.7	92.91	494.2	1667.5
2/23/2011	11:22:02	7.855	11.132	662.3	91.91	507.5	1717.1
2/23/2011	11:23:01	7.865	11.124	658.8	90.81	512.1	1731.1
2/23/2011	11:24:01	7.848	11.141	661.5	92.35	508.3	1712.5
2/23/2011	11:25:00	7.842	11.149	670.7	96.26	493.8	1645.8
2/23/2011	11:26:02	7.854	11.135	663.9	94.39	498.7	1720.3
2/23/2011	11:27:02	7.845	11.147	663.2	93.28	500.8	1672.5
2/23/2011	11:28:01	7.841	11.15	665.3	93.77	501.7	1665.5
2/23/2011	11:29:01	7.85	11.14	665.5	94.09	497.5	1691.1
2/23/2011	11:30:00	7.862	11.129	662.8	93.08	503.6	1657.3
2/23/2011	11:31:02	7.872	11.12	662.3	91.68	503.5	1686.7
2/23/2011	11:32:01	7.864	11.123	660.6	90.95	507.5	1682
2/23/2011	11:33:01	7.874	11.123	666.4	93.97	507.9	1692.3
2/23/2011	11:34:00	7.88	11.116	658.7	90.35	507.4	1700.8
2/23/2011	11:35:02	7.874	11.127	656.2	89.37	499.1	1693
2/23/2011	11:36:01	7.858	11.14	661.9	90.28	501.1	1691.5
2/23/2011	11:37:01	7.874	11.128	665.9	91.83	506.3	1703.3
2/23/2011	11:38:02	7.875	11.126	660.6	89.75	508.2	1723.7
2/23/2011	11:39:02	7.877	11.127	660	89.79	503.3	1748.9
2/23/2011	11:40:01	7.853	11.14	664.7	90.93	494.8	1709
2/23/2011	11:41:00	7.869	11.134	667.9	92.52	501	1596.8
2/23/2011	11:42:02	7.885	11.123	662.6	91.66	522	1662.9
2/23/2011	11:43:01	7.856	11.142	661.4	89.67	504.8	1668.6
2/23/2011	11:44:01	7.87	11.133	666	92.15	509.9	1680.3
2/23/2011	11:45:00	7.865	11.135	666.1	92.51	506.3	1699.1
2/23/2011	11:46:02	7.85	11.144	669	94.16	498	1684.8
2/23/2011	11:47:01	7.869	11.128	670.7	95.05	512.8	1716.8
2/23/2011	11:48:00	7.873	11.123	661.2	91.77	508.9	1704.9
2/23/2011	11:49:02	7.875	11.123	661.2	91.94	517.7	1685.8
2/23/2011	11:50:01	7.905	11.101	657.5	89.93	510.5	1680.9
2/23/2011	11:51:01	7.895	11.113	654	88.23	509.8	1687.7
2/23/2011	11:52:00	7.89	11.117	659.1	89.2	523.9	1690.4
2/23/2011	11:53:02	7.858	11.133	661.1	90.19	508.1	1669.2
2/23/2011	11:54:01	7.878	11.125	663.6	91.6	517.2	1702.1
2/23/2011	11:55:00	7.89	11.116	659.3	90.94	509.4	1708.1
2/23/2011	11:56:02	7.866	11.132	662.4	91.53	507.2	1701.2

2/23/2011	11:57:01	7.872	11.129	665.4	93.35	513.4	1654.1
2/23/2011	11:58:00	7.871	11.13	664.2	93.22	507	1648.2
2/23/2011	11:59:02	7.859	11.138	664.6	92.97	511.5	1671.9
2/23/2011	12:00:01	7.862	11.137	669.9	95.38	507.5	1677.8
2/23/2011	12:01:01	7.893	11.111	658.6	91.06	520	1720.7
2/23/2011	12:02:00	7.854	11.141	659.8	90.44	500.4	1649.9
2/23/2011	12:03:02	7.864	11.135	667.1	93.64	523.7	1704.6
2/23/2011	12:04:01	7.877	11.12	661.6	92.23	519.8	1699.6
2/23/2011	12:05:00	7.886	11.115	662.1	91.91	526.3	1748.6
2/23/2011	12:06:02	7.848	11.143	664.8	91.58	503.5	1673.4
2/23/2011	12:07:01	7.864	11.131	669.4	94.58	512.6	1703.2
2/23/2011	12:08:00	7.859	11.133	664.3	93.1	510.7	1710.7
2/23/2011	12:09:02	7.884	11.114	660.7	92.99	522.9	1730.7
2/23/2011	12:10:01	7.865	11.129	659.6	92.05	514.9	1721.4
2/23/2011	12:11:00	7.862	11.133	666	94.31	513.3	1663.2
2/23/2011	12:12:02	7.854	11.139	665.1	92.97	518.7	1672.8
2/23/2011	12:13:01	7.881	11.118	660.8	92.46	513.7	1691.3
Average of Test Run		O2-A	CO2-A	CO-A	NOx-A	VOC-A	CH4-A
		%	%	%	ppm	ppm	ppm
2/23/2011	12:13:01	7.865	11.131	663.1	92.08	508	1685.5

Test Run 2 End

Final System Bias Check for Run 2 . STRATA Version 2.01

Operator: RMC Environmental, Inc.
Plant Name: WM-Mesquite Creek
Location: Eng 2 Testing

Reference Cylinder Numbers

	Zero	Span
O2-A	CC208529	CC179563
CO2-A	CC208529	CC179563
CO-A	CC208529	CC10518
NOx-A	CC179563	CC208529
VOC-A	CC208529	SG9128607
CH4-A	CC208529	ALM033374

Date/Time 2/23/2011 12:22:07 PASSED

Analyte	O2-A	CO2-A	CO-A	NOx-A	VOC-A	CH4-A
Units	%	%	%	ppm	ppm	ppm
Zero Ref Cyl	0.00	0.00	0.00	0.00	0.00	0.00
Zero Cal	0.24	0.05	6.10	4.81	4.40	22.00
Zero Avg	0.33	0.08	6.80	11.22	-0.10	-6.70
Zero Bias%	0.40	0.20	0.10	2.60	0.40	0.60
Zero Drift%	-1.70	0.00	0.00	0.20	-0.20	-0.20
Span Ref Cyl	12.48	9.44	502.80	119.20	499.20	2540.00
Span Cal	12.63	9.34	499.50	118.63	507.40	2536.40
Span Avg	13.07	9.21	493.10	116.13	502.30	2487.40
Span Bias%	2.10	0.70	0.60	1.00	0.50	1.00
Span Drift%	2.70	-1.50	-1.50	0.00	-0.10	0.80
Ini Zero Avg	0.69	0.08	6.40	10.73	1.80	1.30
Ini Span Avg	12.50	9.48	508.10	116.23	503.00	2449.40
Run Avg	7.87	11.13	663.10	92.08	508.00	1685.50
Co	0.51	0.08	6.60	10.98	0.90	-2.70
Cm	12.79	9.35	500.60	116.18	502.70	2468.40
Correct Avg	7.48	11.26	668.20	91.90	504.50	1732.30

Test Run 3 Begin. STRATA Version 2.01
Operator: RMC Environmental, Inc.
Plant Name: WM-Mesquite Creek
Location: Eng 2 Testing

		O2-A	CO2-A	CO-A	NOx-A	VOC-A	CH4-A
		%	%	%	ppm	ppm	ppm
Begin calculating run averages							
2/23/2011	12:26:02	8.696	11.133	662.7	92.71	501.9	1707.6
2/23/2011	12:27:02	8.686	11.137	665.9	93.74	496.2	1625.5
2/23/2011	12:28:01	8.693	11.129	665.2	93.94	498.9	1614.4
2/23/2011	12:29:01	8.712	11.114	663.2	94.16	515.4	1626.9
2/23/2011	12:30:03	8.704	11.124	660	91.58	520.6	1680.4
2/23/2011	12:31:02	8.698	11.128	665.7	93.93	506.2	1695.5
2/23/2011	12:32:02	8.705	11.122	660	91.65	505.1	1701.9
2/23/2011	12:33:01	8.713	11.115	663.7	92.31	506.9	1678.5
2/23/2011	12:34:03	8.716	11.113	655.7	89.67	514.9	1631.5
2/23/2011	12:35:02	8.7	11.124	662.6	91.93	506.1	1705.8
2/23/2011	12:36:02	8.704	11.119	663.9	92.81	507	1673.2
2/23/2011	12:37:01	8.707	11.119	665.8	93.08	499.3	1648.7
2/23/2011	12:38:01	8.707	11.114	661.5	91.14	504.9	1666.4
2/23/2011	12:39:02	8.723	11.109	664.1	91.7	516.2	1735.8
2/23/2011	12:40:02	8.707	11.114	658.7	90.86	512.4	1696.8
2/23/2011	12:41:01	8.701	11.123	667.6	94.16	501.9	1691
2/23/2011	12:42:01	8.73	11.1	659.9	92.09	509.6	1709.8
2/23/2011	12:43:02	8.708	11.115	661.2	91.38	514	1673.4
2/23/2011	12:44:02	8.703	11.119	663.2	91.98	506.6	1649.7
2/23/2011	12:45:01	8.726	11.104	668.4	94.57	523.7	1710.4
2/23/2011	12:46:01	8.731	11.101	655.5	89.5	517.2	1701.7
2/23/2011	12:47:03	8.709	11.116	659.8	89.67	513.7	1671.5
2/23/2011	12:48:02	8.703	11.125	667.8	92.96	505.6	1666.6
2/23/2011	12:49:01	8.714	11.112	661	91.67	516.4	1656
2/23/2011	12:50:01	8.717	11.115	663.4	92.33	521.9	1728.6
2/23/2011	12:51:02	8.702	11.124	659.3	90.69	499.1	1701.4
2/23/2011	12:52:02	8.726	11.109	660.9	91.91	521.5	1714.7
2/23/2011	12:53:01	8.705	11.121	655.5	89.79	505.2	1694
2/23/2011	12:54:01	8.705	11.126	666.1	94.03	505.2	1687.1
2/23/2011	12:55:02	8.713	11.119	664.9	92.81	520	1676.1
2/23/2011	12:56:02	8.684	11.145	672.4	95.21	506.5	1689.8
2/23/2011	12:57:01	8.722	11.115	668.6	94.56	514.5	1714.7
2/23/2011	12:58:03	8.728	11.11	659.2	91.39	515	1696.9
2/23/2011	12:59:02	8.707	11.124	666.3	92.79	509.1	1693.3
2/23/2011	13:00:02	8.705	11.126	665.7	92.96	498.8	1686.1
2/23/2011	13:01:01	8.713	11.122	665.9	92.6	513.7	1683.2
2/23/2011	13:02:03	8.714	11.114	662.5	92.13	507	1705.3
2/23/2011	13:03:02	8.7	11.126	661.9	91.35	517.3	1699.9
2/23/2011	13:04:02	8.705	11.121	667.7	93.8	511.2	1665
2/23/2011	13:05:01	8.707	11.121	661.2	91.31	511.3	1691.8
2/23/2011	13:06:02	8.706	11.115	665.1	92.33	507.4	1714.2
2/23/2011	13:07:02	8.71	11.116	657.3	90.05	505.1	1723.4
2/23/2011	13:08:01	8.687	11.129	663	92.26	497.1	1691.9

2/23/2011	13:09:03	8.679	11.136	665.8	93.09	514.2	1710.5
2/23/2011	13:10:02	8.681	11.131	672.3	95.33	513.5	1697.5
2/23/2011	13:11:01	8.708	11.114	670.6	94.76	513.3	1719.8
2/23/2011	13:12:03	8.705	11.112	662.8	91.31	513.2	1682.2
2/23/2011	13:13:02	8.679	11.136	666.4	92.71	505.7	1686
2/23/2011	13:14:01	8.672	11.141	669.9	93.95	500.4	1674.7
2/23/2011	13:15:03	8.702	11.114	665.8	93.33	516.4	1713.4
2/23/2011	13:16:02	8.705	11.111	659.8	90.47	511.8	1722.8
2/23/2011	13:17:02	8.69	11.125	666.8	91.83	512.3	1731.6
2/23/2011	13:18:01	8.677	11.129	666.8	93.44	509	1701.2
2/23/2011	13:19:02	8.689	11.12	665.7	93.38	511.4	1738.9
2/23/2011	13:20:01	8.695	11.115	662.7	91.58	513	1697.8
2/23/2011	13:21:03	8.68	11.128	658.2	89.68	509	1700.8
2/23/2011	13:22:02	8.668	11.138	672.3	94.26	495.8	1659.9
2/23/2011	13:23:02	8.676	11.131	667.7	93.22	505.9	1695.5
2/23/2011	13:24:01	8.685	11.125	666.4	92.83	517.3	1737.4
2/23/2011	13:25:02	8.634	11.091	668	92.95	501.9	1695.1
Average of Test Run		O2-A	CO2-A	CO-A	NOx-A	VOC-A	CH4-A
		%	%	%	ppm	ppm	ppm
2/23/2011	13:25:02	8.701	11.12	663.9	92.42	509.5	1690.7

Test Run 3 End

Final System Bias Check for Run 3 . STRATA Version 2.01

Operator: RMC Environmental, Inc.
Plant Name: WM-Mesquite Creek
Location: Eng 2 Testing

Reference Cylinder Numbers

	Zero	Span
O2-A	CC208529	CC179563
CO2-A	CC208529	CC179563
CO-A	CC208529	CC10518
NOx-A	CC179563	CC208529
VOC-A	CC208529	SG9128607
CH4-A	CC208529	ALM033374

Date/Time 2/23/2011 13:37:21 PASSED

Analyte	O2-A	CO2-A	CO-A	NOx-A	VOC-A	CH4-A
Units	%	%	%	ppm	ppm	ppm
Zero Ref Cyl	0.00	0.00	0.00	0.00	0.00	0.00
Zero Cal	0.24	0.05	6.10	4.81	4.40	22.00
Zero Avg	0.68	0.08	6.70	15.15	-0.30	-3.70
Zero Bias%	2.10	0.10	0.10	4.10	0.50	0.50
Zero Drift%	1.70	0.00	0.00	1.60	0.00	0.10
Span Ref Cyl	12.48	9.44	502.80	119.20	499.20	2540.00
Span Cal	12.63	9.34	499.50	118.63	507.40	2536.40
Span Avg	12.74	9.22	487.80	115.35	499.80	2525.80
Span Bias%	0.50	0.60	1.20	1.30	0.80	0.20
Span Drift%	-1.60	0.10	-0.50	-0.30	-0.30	0.80
Ini Zero Avg	0.33	0.08	6.80	11.22	-0.10	-6.70
Ini Span Avg	13.07	9.21	493.10	116.13	502.30	2487.40
Run Avg	8.70	11.12	663.90	92.42	509.50	1690.70
Co	0.51	0.08	6.80	13.19	-0.20	-5.20
Cm	12.91	9.22	490.40	115.74	501.10	2506.60
Correct Avg	8.25	11.41	683.20	92.09	507.70	1714.50

Test Run 4 Begin. STRATA Version 2.01
Operator: RMC Environmental, Inc.
Plant Name: WM-Mesquite Creek
Location: Eng 1 Testing

		O2-A	CO2-A	CO-A	NOx-A	VOC-A	CH4-A
		%	%	%	ppm	ppm	ppm
Begin calculating run averages							
2/23/2011	14:11:03	8.404	11.086	671.4	94.43	514.1	1706.8
2/23/2011	14:12:02	8.414	11.075	673.7	96.21	473.2	1594.5
2/23/2011	14:13:02	8.451	11.052	666.9	92.11	521.2	1804.3
2/23/2011	14:14:03	8.427	11.066	667.3	93.39	512.3	1669.7
2/23/2011	14:15:03	8.44	11.057	667.4	93.78	495.8	1653.9
2/23/2011	14:16:02	8.434	11.062	667.7	93.28	506.5	1668.8
2/23/2011	14:17:02	8.423	11.071	671	94.56	506.3	1700.2
2/23/2011	14:18:01	8.455	11.04	665	93.4	494.2	1667.3
2/23/2011	14:19:03	8.438	11.05	654.9	88.29	501.9	1718.5
2/23/2011	14:20:03	8.428	11.061	674.3	95.57	506.4	1730.4
2/23/2011	14:21:02	8.434	11.053	664.2	92.26	503.2	1675.1
2/23/2011	14:22:02	8.412	11.072	666.4	93.1	496	1610.6
2/23/2011	14:23:03	8.435	11.053	669.1	94.18	495.1	1691.1
2/23/2011	14:24:03	8.428	11.056	664.9	93.16	498.4	1657.6
2/23/2011	14:25:02	8.418	11.062	667.8	94.5	499.9	1669.6
2/23/2011	14:26:02	8.392	11.081	673.9	96.44	472.6	1567.1
2/23/2011	14:27:03	9.147	10.393	666.9	94.77	450.5	1504.4
2/23/2011	14:28:03	8.486	10.998	620.9	83.34	519.3	1771.5
2/23/2011	14:29:02	8.445	11.039	670	95.43	498	1678.4
2/23/2011	14:30:02	8.475	11.019	664.4	92.94	508.9	1712.3
Begin Traverse							
2/23/2011	14:31:03	8.45	11.036	657.4	89.44	484.6	1603.4
2/23/2011	14:32:03	8.458	11.033	662.2	91.07	522.1	1729.1
2/23/2011	14:33:02	8.446	11.039	667	93.58	494.1	1664.2
2/23/2011	14:34:02	8.446	11.039	667.3	93.3	516.6	1750.8
2/23/2011	14:35:01	8.431	11.046	669.9	96.04	485.6	1613.2
2/23/2011	14:36:03	8.439	11.043	669.2	94.69	502.1	1719.9
2/23/2011	14:37:03	8.432	11.047	673.4	96.7	492.5	1636.5
2/23/2011	14:38:02	8.431	11.046	666.3	93.88	491.9	1635.3
2/23/2011	14:39:01	8.44	11.039	667.9	94.36	485.8	1626
2/23/2011	14:40:03	8.448	11.029	657.6	90.79	487.3	1599.9
2/23/2011	14:41:03	8.45	11.028	661.1	91.5	505.6	1681.2
2/23/2011	14:42:02	8.428	11.045	668.7	93.93	496.3	1643.7
2/23/2011	14:43:01	8.434	11.037	668	94.6	479.6	1617.9
2/23/2011	14:44:03	8.44	11.034	667.6	93.9	514.9	1718.5
2/23/2011	14:45:03	8.446	11.03	666.2	93.7	479.8	1638.9
2/23/2011	14:46:02	8.433	11.043	663.3	91.57	518.2	1752.5
2/23/2011	14:47:01	8.42	11.053	675.6	97.32	482.1	1589.4
2/23/2011	14:48:03	8.425	11.044	669.9	94.41	496.3	1588.4
2/23/2011	14:49:03	8.45	11.028	664.2	93.1	526	1760.9
2/23/2011	14:50:02	8.434	11.039	665.3	93.41	519.2	1710.6
Begin Traverse							
2/23/2011	14:51:01	8.458	11.021	665	93.1	528.8	1776.5

2/23/2011	14:52:03	8.417	11.045	665.4	92.53	499.3	1631.2
2/23/2011	14:53:03	8.432	11.034	666.2	94.7	521.8	1742.5
2/23/2011	14:54:02	8.426	11.046	673	96.32	543.2	1794.3
2/23/2011	14:55:01	8.428	11.041	678.7	98.22	516.7	1733
2/23/2011	14:56:03	8.422	11.041	676.2	97.48	477.4	1621.4
2/23/2011	14:57:02	8.446	11.023	666.7	95.8	501.3	1698.1
2/23/2011	14:58:02	8.437	11.03	665.5	94.36	488.7	1636.5
2/23/2011	14:59:03	8.444	11.029	666.3	94.56	517.2	1774.4
2/23/2011	15:00:03	8.462	11.012	669.2	96.12	525.9	1804.2
2/23/2011	15:01:02	8.437	11.029	670	96.21	506.6	1729.2
2/23/2011	15:02:02	8.457	11.019	668.2	95.98	519	1794.3
2/23/2011	15:03:03	8.453	11.023	662.4	93.36	514.7	1744.2
2/23/2011	15:04:03	8.439	11.035	672.1	96.36	538.8	1796.2
2/23/2011	15:05:02	8.477	11.008	670.8	97.06	520.3	1662.5
2/23/2011	15:06:02	8.479	11.002	652.5	89.3	523.9	1645.7
2/23/2011	15:07:03	8.457	11.019	658.7	90.13	509.2	1610.9
2/23/2011	15:08:03	8.433	11.038	662.6	91.7	502	1606.9
2/23/2011	15:09:02	8.42	11.048	673	96.66	497.3	1595.7
2/23/2011	15:10:01	8.434	10.984	672	97.31	512.2	1645
Average of Test Run		O2-A	CO2-A	CO-A	NOx-A	VOC-A	CH4-A
		%	%	%	ppm	ppm	ppm
2/23/2011	15:10:01	8.451	11.029	666.5	93.89	503.6	1679.4

Test Run 4 End

Final System Bias Check for Run 4 . STRATA Version 2.01

Operator:	RMC Environmental, Inc.	
Plant Name:	WM-Mesquite Creek	
Location:	Eng 1 Testing	
	Reference Cylinder Numbers	
	Zero	Span
O2-A	CC208529	CC179563
CO2-A	CC208529	CC179563
CO-A	CC208529	CC10518
NOx-A	CC179563	CC208529
VOC-A	CC208529	SG9128607
CH4-A	CC208529	ALM033374

Date/Time	2/23/2011	15:18:50	PASSED			
Analyte	O2-A	CO2-A	CO-A	NOx-A	VOC-A	CH4-A
Units	%	%	%	ppm	ppm	ppm
Zero Ref Cyl	0.00	0.00	0.00	0.00	0.00	0.00
Zero Cal	0.24	0.05	6.10	4.81	4.40	22.00
Zero Avg	0.76	0.07	6.20	14.40	0.80	0.40
Zero Bias%	2.50	0.10	0.00	3.80	0.40	0.40
Zero Drift%	0.40	0.00	-0.10	-0.30	0.10	0.10
Span Ref Cyl	12.48	9.44	502.80	119.20	499.20	2540.00
Span Cal	12.63	9.34	499.50	118.63	507.40	2536.40
Span Avg	12.70	9.21	492.70	115.35	491.90	2513.80
Span Bias%	0.30	0.70	0.70	1.30	1.50	0.50
Span Drift%	-0.20	-0.10	0.50	0.00	-0.80	-0.20
Ini Zero Avg	0.68	0.08	6.70	15.15	-0.30	-3.70
Ini Span Avg	12.74	9.22	487.80	115.35	499.80	2525.80
Run Avg	8.45	11.03	666.50	93.89	503.60	1679.40
Co	0.72	0.08	6.40	14.78	0.30	-1.60
Cm	12.72	9.22	490.20	115.35	495.90	2519.80
Correct Avg	8.04	11.32	686.00	93.76	507.00	1693.40

Test Run 5 Begin. STRATA Version 2.01
Operator: RMC Environmental, Inc.
Plant Name: WM-Mesquite Creek
Location: Eng 1 Testing

		O2-A	CO2-A	CO-A	NOx-A	VOC-A	CH4-A
		%	%	%	ppm	ppm	ppm
Begin calculating run averages							
2/23/2011	15:25:05	8.48	11.02	665.4	94.95	545.1	1784.5
2/23/2011	15:26:04	8.429	11.059	681.3	100.03	480.4	1591.7
2/23/2011	15:27:04	8.486	11.019	674.7	99.09	511.9	1619.4
2/23/2011	15:28:03	8.5	11.006	659.6	92.46	522	1721.6
2/23/2011	15:29:05	8.507	11.004	662.3	92.7	540.9	1829.7
2/23/2011	15:30:05	8.483	11.018	662.2	93.17	509.9	1659
2/23/2011	15:31:04	8.466	11.031	663.7	93.34	516.4	1711.3
2/23/2011	15:32:04	8.451	11.04	675.3	98.22	498.6	1686.8
2/23/2011	15:33:05	8.462	11.034	673.8	97.73	500.7	1704.7
2/23/2011	15:34:05	8.44	11.056	672.1	97.13	505	1699.8
2/23/2011	15:35:04	8.503	11.014	677.7	100.05	532.9	1751.7
2/23/2011	15:36:04	8.501	11.016	662.1	93.93	533	1751.7
2/23/2011	15:37:05	8.476	11.032	659.2	92.44	499.9	1703.1
2/23/2011	15:38:05	8.468	11.043	659.6	92.21	500.5	1684.9
2/23/2011	15:39:04	8.483	11.034	662.1	93.02	506.6	1747
2/23/2011	15:40:04	8.479	11.033	661.7	92.54	510.1	1750.2
2/23/2011	15:41:05	8.494	11.022	658	91.92	510.3	1758.5
2/23/2011	15:42:05	8.47	11.044	660.1	91.21	524	1777.8
2/23/2011	15:43:04	8.46	11.051	671.5	95.61	516.8	1734.6
2/23/2011	15:44:04	8.468	11.049	675.4	98.42	540	1775.3
2/23/2011	15:45:05	8.472	11.044	674.4	98.55	503.9	1692.8
2/23/2011	15:46:05	8.473	11.041	659.8	93.21	512.3	1746.4
2/23/2011	15:47:04	8.479	11.039	665.7	94.43	535.5	1801.1
2/23/2011	15:48:04	8.467	11.047	668.8	96.36	509.9	1746.7
2/23/2011	15:49:05	8.48	11.037	668.8	96.61	519.7	1761.9
2/23/2011	15:50:05	8.475	11.042	670.7	96.14	511.6	1710.4
2/23/2011	15:51:04	8.478	11.037	669.8	96.48	519.4	1771.9
2/23/2011	15:52:04	8.467	11.045	671.2	97.28	503.6	1654.4
2/23/2011	15:53:05	8.48	11.037	670.8	98.34	512.8	1744
2/23/2011	15:54:05	8.471	11.039	664.4	94.78	497.1	1707.6
2/23/2011	15:55:04	8.519	11.011	663.6	94.21	571	1914.5
2/23/2011	15:56:04	8.491	11.03	662.5	93.67	540.9	1823.1
2/23/2011	15:57:05	8.482	11.042	668.5	95.62	544.6	1841.8
2/23/2011	15:58:05	8.507	11.021	665.2	94.5	544	1781.1
2/23/2011	15:59:04	8.474	11.048	665.5	93.24	517.8	1728.2
2/23/2011	16:00:04	8.485	11.043	667.2	94.28	536.5	1807.6
2/23/2011	16:01:05	8.482	11.038	664.2	94.23	508.6	1698.2
2/23/2011	16:02:05	8.471	11.047	664.4	93.65	501.4	1712.3
2/23/2011	16:03:04	8.481	11.039	664.8	94.29	528.7	1781.5
2/23/2011	16:04:04	8.495	11.033	668.8	95.72	532.8	1801.5
2/23/2011	16:05:05	8.503	11.03	659.2	92.64	538.6	1826.2
2/23/2011	16:06:05	8.458	11.066	665.4	94.47	524.2	1740.9
2/23/2011	16:07:04	8.502	11.035	678.9	100.12	578.1	1903.6

2/23/2011	16:08:04	8.492	11.04	670.3	97.67	546.8	1859.2
2/23/2011	16:09:05	8.481	11.047	673.4	99.59	529.9	1797.5
2/23/2011	16:10:05	8.499	11.029	669.6	97.44	533.9	1793.5
2/23/2011	16:11:04	8.499	11.032	665.1	95.6	544.4	1712.8
2/23/2011	16:12:05	8.494	11.04	663.2	94.22	551	1787
2/23/2011	16:13:05	8.484	11.043	669.8	98.04	508.8	1771.2
2/23/2011	16:14:04	8.484	11.047	666.8	96.01	507.9	1761.9
2/23/2011	16:15:04	8.462	11.063	665	95.08	495.7	1704.8
2/23/2011	16:16:05	8.491	11.052	671.3	97.42	550.7	1876.5
2/23/2011	16:17:05	8.486	11.058	672.9	98.72	529.6	1815.5
2/23/2011	16:18:04	8.479	11.065	675.1	99.69	546	1768
2/23/2011	16:19:03	8.496	11.053	668.1	96.74	521.5	1762
2/23/2011	16:20:05	8.5	11.054	659.6	93.55	532.4	1822
2/23/2011	16:21:05	8.486	11.063	665.1	95.82	526.8	1785.4
2/23/2011	16:22:04	8.492	11.059	668.3	97.89	527.7	1731.5
2/23/2011	16:23:03	8.489	11.072	668	95.9	552.5	1836.5
2/23/2011	16:24:06	8.518	11.046	667.7	96.42	554.1	1862.8
Average of Test Run		O2-A	CO2-A	CO-A	NOx-A	VOC-A	CH4-A
		%	%	%	ppm	ppm	ppm
2/23/2011	16:24:06	8.482	11.04	667.3	95.64	524.3	1760

Test Run 5 End

Final System Bias Check for Run 5 . STRATA Version 2.01

Operator: RMC Environmental, Inc.
Plant Name: WM-Mesquite Creek
Location: Eng 1 Testing

Reference Cylinder Numbers

	Zero	Span
O2-A	CC208529	CC179563
CO2-A	CC208529	CC179563
CO-A	CC208529	CC10518
NOx-A	CC179563	CC208529
VOC-A	CC208529	SG9128607
CH4-A	CC208529	ALM033374

Date/Time 2/23/2011 16:36:30 PASSED

Analyte	O2-A	CO2-A	CO-A	NOx-A	VOC-A	CH4-A
Units	%	%	%	ppm	ppm	ppm
Zero Ref Cyl	0.00	0.00	0.00	0.00	0.00	0.00
Zero Cal	0.24	0.05	6.10	4.81	4.40	22.00
Zero Avg	0.64	0.08	6.50	10.42	0.70	-2.20
Zero Bias%	1.90	0.10	0.00	2.20	0.40	0.50
Zero Drift%	-0.60	0.00	0.00	-1.60	0.00	-0.10
Span Ref Cyl	12.48	9.44	502.80	119.20	499.20	2540.00
Span Cal	12.63	9.34	499.50	118.63	507.40	2536.40
Span Avg	12.69	9.26	494.60	113.88	503.70	2474.90
Span Bias%	0.30	0.40	0.50	1.90	0.40	1.20
Span Drift%	0.00	0.30	0.20	-0.60	1.20	-0.80
Ini Zero Avg	0.76	0.07	6.20	14.40	0.80	0.40
Ini Span Avg	12.70	9.21	492.70	115.35	491.90	2513.80
Run Avg	8.48	11.04	667.30	95.64	524.30	1760.00
Co	0.70	0.08	6.30	12.41	0.80	-0.90
Cm	12.69	9.23	493.70	114.61	497.80	2494.40
Correct Avg	8.10	11.31	682.00	97.08	525.80	1791.10

Test Run 6 Begin. STRATA Version 2.01
Operator: RMC Environmental, Inc.
Plant Name: WM-Mesquite Creek
Location: Eng 1 Testing

		O2-A	CO2-A	CO-A	NOx-A	VOC-A	CH4-A
		%	%	%	ppm	ppm	ppm
Begin calculating run averages							
2/23/2011	16:40:02	8.51	11.415	665.6	96.5	547.8	1734.7
2/23/2011	16:41:02	8.497	11.173	662.9	94.4	557.1	1738.3
2/23/2011	16:42:01	8.475	11.095	666.2	95.95	538.9	1728.2
2/23/2011	16:43:01	8.505	11.093	665.9	96.23	550.3	1698
2/23/2011	16:44:02	8.466	11.128	665.8	96.08	516.9	1704.1
2/23/2011	16:45:02	8.492	11.099	675.2	99.82	531.6	1792.2
2/23/2011	16:46:01	8.524	11.045	661.2	95.17	557.7	1833.9
2/23/2011	16:47:01	8.495	11.251	658.9	93.66	535.8	1755.6
2/23/2011	16:48:02	8.459	11.384	665.7	95.51	504.7	1637.4
2/23/2011	16:49:02	8.466	11.216	671.9	98.01	527.9	1589.7
2/23/2011	16:50:01	8.496	11.176	676.5	99.61	540.1	1641
2/23/2011	16:51:01	8.483	11.127	664.2	94.47	518.8	1738.1
2/23/2011	16:52:02	8.486	11.087	663.1	95.1	522.5	1707.4
2/23/2011	16:53:02	8.478	11.076	666.1	96.17	511.9	1682
2/23/2011	16:54:02	8.47	11.065	666.3	95.92	509.2	1700.8
2/23/2011	16:55:01	8.459	11.071	669.2	96.54	509.6	1679
2/23/2011	16:56:01	8.481	11.05	667.2	96.23	516.3	1742.6
2/23/2011	16:57:02	8.491	11.039	662.2	94.96	527	1664.7
2/23/2011	16:58:02	8.459	11.065	663.2	95.76	521.6	1720
2/23/2011	16:59:01	8.482	11.047	672.1	99.02	519.7	1725.7
2/23/2011	17:00:01	8.487	11.04	666	96.43	517.3	1731.2
2/23/2011	17:01:02	8.483	11.038	660.4	93.62	496.3	1604.3
2/23/2011	17:02:02	8.5	11.027	658.8	93.18	535.7	1710.4
2/23/2011	17:03:01	8.482	11.042	660.3	93.16	524.7	1707.4
2/23/2011	17:04:01	8.473	11.048	666	95.89	523.5	1720
2/23/2011	17:05:01	8.519	11.021	671.3	98.05	586	1899
2/23/2011	17:06:02	8.514	11.019	661.2	94.3	556.6	1805.3
2/23/2011	17:07:02	8.51	11.023	658.6	92.36	564.4	1855.4
2/23/2011	17:08:01	8.494	11.034	661.3	93.75	517.9	1657.9
2/23/2011	17:09:01	8.521	11.018	656.7	92.26	549.1	1824.9
2/23/2011	17:10:02	8.474	11.052	662.2	94.69	501	1679.1
2/23/2011	17:11:02	8.497	11.034	659.8	93.54	499.1	1670.5
2/23/2011	17:12:01	8.521	11.017	653.6	90.65	546	1771.1
2/23/2011	17:13:01	8.462	11.056	662.3	93.74	503.6	1564.9
2/23/2011	17:14:03	8.476	11.055	674.2	98.95	517.5	1676.1
2/23/2011	17:15:02	8.497	11.032	667.8	97.06	517.7	1736.3
2/23/2011	17:16:01	8.506	11.023	663.6	95.36	546.9	1797.4
2/23/2011	17:17:01	8.499	11.027	663.6	95.56	523.2	1683.2
2/23/2011	17:18:03	8.506	11.022	660.5	94.36	509.3	1678.4
2/23/2011	17:19:02	8.488	11.031	655.8	92.95	504.7	1627.8
2/23/2011	17:20:02	8.468	11.049	666.3	95.31	511.7	1707.3
2/23/2011	17:21:01	8.478	11.038	670.6	98.63	527.4	1748.6
2/23/2011	17:22:01	8.483	11.037	674	99.79	520	1732.1

2/23/2011	17:23:02	8.535	10.999	659.5	93.09	537.7	1741.1
2/23/2011	17:24:02	8.516	11.013	647	87.7	533.9	1707.4
2/23/2011	17:25:01	8.503	11.033	657.2	92.19	547.5	1800.9
2/23/2011	17:26:01	8.475	11.044	663.4	94.94	510.8	1696.6
2/23/2011	17:27:02	8.477	11.042	666.2	96.51	498.2	1675.8
2/23/2011	17:28:02	8.484	11.041	662.2	94.46	508	1643.8
2/23/2011	17:29:01	8.488	11.031	661.2	93.6	490.2	1622.2
2/23/2011	17:30:01	8.487	11.036	664.5	94.4	527.6	1751
2/23/2011	17:31:03	8.464	11.047	677	99.38	512.6	1682
2/23/2011	17:32:02	8.518	11.006	669.5	98.56	522.4	1779.2
2/23/2011	17:33:02	8.499	11.023	659	93.5	504.7	1710.1
2/23/2011	17:34:01	8.483	11.039	668.1	96.64	534.9	1812.2
2/23/2011	17:35:01	8.476	11.038	669.8	98.41	492.2	1610.2
2/23/2011	17:36:02	8.495	11.018	658.8	93.8	512.2	1703.4
2/23/2011	17:37:02	8.481	11.035	664.7	94.16	513	1689.4
2/23/2011	17:38:01	8.446	10.919	668.6	97.09	506	1678.7
2/23/2011	17:39:01	8.486	11.034	667.4	96.9	543.9	1803.9
Average of Test Run		O2-A	CO2-A	CO-A	NOx-A	VOC-A	CH4-A
		%	%	%	ppm	ppm	ppm
2/23/2011	17:39:01	8.489	11.065	664.5	95.4	524.3	1715

Test Run 6 End

Final System Bias Check for Run 6 . STRATA Version 2.01

Operator: RMC Environmental, Inc.
Plant Name: WM-Mesquite Creek
Location: Eng 1 Testing

Reference Cylinder Numbers

	Zero	Span
O2-A	CC208529	CC179563
CO2-A	CC208529	CC179563
CO-A	CC208529	CC10518
NOx-A	CC179563	CC208529
VOC-A	CC208529	SG9128607
CH4-A	CC208529	ALM033374

Date/Time 2/23/2011 17:53:44 PASSED

Analyte	O2-A	CO2-A	CO-A	NOx-A	VOC-A	CH4-A
Units	%	%	%	ppm	ppm	ppm
Zero Ref Cyl	0.00	0.00	0.00	0.00	0.00	0.00
Zero Cal	0.24	0.05	6.10	4.81	4.40	22.00
Zero Avg	0.43	0.07	6.70	9.96	0.80	-1.30
Zero Bias%	0.90	0.10	0.10	2.10	0.40	0.50
Zero Drift%	-1.00	0.00	0.00	-0.20	0.00	0.00
Span Ref Cyl	12.48	9.44	502.80	119.20	499.20	2540.00
Span Cal	12.63	9.34	499.50	118.63	507.40	2536.40
Span Avg	12.56	9.26	493.40	115.36	499.30	2475.40
Span Bias%	0.30	0.40	0.60	1.30	0.80	1.20
Span Drift%	-0.60	0.00	-0.10	0.60	-0.40	0.00
Ini Zero Avg	0.64	0.08	6.50	10.42	0.70	-2.20
Ini Span Avg	12.69	9.26	494.60	113.88	503.70	2474.90
Run Avg	8.49	11.07	664.50	95.40	524.30	1715.00
Co	0.53	0.08	6.60	10.19	0.80	-1.70
Cm	12.62	9.26	494.00	114.62	501.50	2475.20
Correct Avg	8.21	11.30	678.60	97.26	522.00	1760.40

APPENDIX C. TEST QA/ QC FORMS

Calibration Gas Certificates of Analysis

Meterbox Calibrations

Pitot Calibrations

Airgas

Airgas Specialty Gases
12722 S. Wentworth Avenue
Chicago, IL 60628
1-773-785-3000
FAX: 1-773-785-1928
www.airgas.com

CERTIFICATE OF ANALYSIS
Grade of Product: EPA Protocol

Part Number:	E03NI61E15A2839	Reference Number:	54-124193110-4
Cylinder Number:	CC147760	Cylinder Volume:	158 Cu.Ft.
Laboratory:	ASG - Chicago - IL	Cylinder Pressure:	2015 PSIG
Analysis Date:	Oct 06, 2009	Valve Outlet:	590

Expiration Date: Oct 06, 2012

Certification performed in accordance with "EPA Traceability Protocol (Sept. 1997)" using the assay procedures listed. Analytical Methodology does not require correction for analytical interferences. This cylinder has a total analytical uncertainty as stated below with a confidence level of 95%. There are no significant impurities which affect the use of this calibration mixture. All concentrations are on a volume/volume basis unless otherwise noted.
Do Not Use This Cylinder below 150 psig i.e. 1 Mega Pascal

ANALYTICAL RESULTS

Component	Requested Concentration	Actual Concentration	Protocol Method	Total Relative Uncertainty
CARBON DIOXIDE	17.50 %	16.98 %	G1	+/- 1% NIST Traceable
OXYGEN	20.80 %	20.85 %	G1	+/- 1% NIST Traceable
NITROGEN	Balance			

CALIBRATION STANDARDS

Type	Lot ID	Cylinder No	Concentration	Expiration Date
NTRM/O2	60608	CC206109	22.51% OXYGEN/NITROGEN	May 01, 2010
NTRM/CO2	40604	XC034327B	19.84% CARBON DIOXIDE/	May 15, 2012

ANALYTICAL EQUIPMENT

Instrument/Make/Model	Analytical Principle	Last Multipoint Calibration
HORIBA 510	NDIR	Sep 21, 2009
HORIBA MPA-510	Paramagnetic	Sep 21, 2009

Triad Data Available Upon Request

Notes:

QA Approval

Airgas

Airgas Speciality Gases
12722 S. Wentworth Avenue
Chicago, IL 60628
1-773-785-3000
FAX 1-773-785-1928
http://www.airgas.com

CERTIFICATE OF ANALYSIS
Grade of Product: EPA Protocol

Part Number:	E03NI78E15A56Y2	Reference Number:	54-124224926-2
Cylinder Number:	CC179563	Cylinder Volume:	151 Cu.Ft.
Laboratory:	ASG - Chicago - IL	Cylinder Pressure:	2015 PSIG
Analysis Date:	Jul 02, 2010	Valve Outlet:	590

Expiration Date: Jul 02, 2013

Certification performed in accordance with "EPA Traceability Protocol (Sept. 1997)" using the assay procedures listed. Analytical Methodology does not require correction for analytical interferences. This cylinder has a total analytical uncertainty as stated below with a confidence level of 95%. There are no significant impurities which affect the use of this calibration mixture. All concentrations are on a volume/volume basis unless otherwise noted.
Do Not Use This Cylinder below 150 psig.i.e. 1 Mega Pascal

ANALYTICAL RESULTS

Component	Requested Concentration	Actual Concentration	Protocol Method	Total Relative Uncertainty
CARBON DIOXIDE	9.500 %	9.443 %	G1	+/- 1% NIST Traceable
OXYGEN	12.50 %	12.48 %	G1	+/- 1% NIST Traceable
NITROGEN	Balance			

CALIBRATION STANDARDS

Type	Lot ID	Cylinder No	Concentration	Expiration Date
NTRM/CO2	1	CC59142	13.78% CARBON DIOXIDE/	Oct 02, 2012
NTRM/O2	981202	CC73607	14.84% OXYGEN/	Oct 02, 2012

ANALYTICAL EQUIPMENT

Instrument/Make/Model	Analytical Principle	Last Multipoint Calibration
(CO2-1)HORIBA VIA-510	NDIR	Jun 03, 2010
(O2-1)HORIBA MPA-510	Paramagnetic	Jun 03, 2010

Triad Data Available Upon Request

Notes:

Approved for Release

Airgas

Airgas Specialty Gases
12722 S. Wentworth Avenue
Chicago, IL 60628
1-773-785-3000
FAX: 1-773-785-1928
www.airgas.com

CERTIFICATE OF ANALYSIS
Grade of Product: EPA Protocol

Part Number:	E02NI99E15A3168	Reference Number:	54-124218515-3
Cylinder Number:	SG9128607BAL	Cylinder Volume:	144 Cu.Ft.
Laboratory:	ASG - Chicago - IL	Cylinder Pressure:	2015 PSIG
Analysis Date:	May 17, 2010	Valve Outlet:	350

Expiration Date: May 17, 2013

Certification performed in accordance with "EPA Traceability Protocol (Sept. 1997)" using the assay procedures listed. Analytical Methodology does not require correction for analytical interferences. This cylinder has a total analytical uncertainty as stated below with a confidence level of 95%. There are no significant impurities which affect the use of this calibration mixture. All concentrations are on a volume/volume basis unless otherwise noted.
Do Not Use This Cylinder below 150 psig.i.e. 1 Mega Pascal

ANALYTICAL RESULTS

Component	Requested Concentration	Actual Concentration	Protocol Method	Total Relative Uncertainty
CARBON MONOXIDE	500.0 PPM	499.2 PPM	G1	+/- 1% NIST Traceable
NITROGEN	Balance			

CALIBRATION STANDARDS

Type	Lot ID	Cylinder No	Concentration	Expiration Date
NTRM/CO	09060427	CC286630	501.3PPM CARBON MONOXIDE/	Feb 01, 2013

ANALYTICAL EQUIPMENT

Instrument/Make/Model	Analytical Principle	Last Multipoint Calibration
(FTIR-1)Nicolet Nexus	FTIR	May 14, 2010

Triad Data Available Upon Request

Notes:

Approved for Release

AIR LIQUIDE | Air Liquide America Specialty Gases LLC | Scott

COMPLIANCE CLASS

Dual-Analyzed Calibration Standard

1290 COMBERMERE STREET, TROY, MI 48083 Phone: 248-589-2950 Fax: 248-589-2134

CERTIFICATE OF ACCURACY: EPA Protocol Gas

Assay Laboratory

P.O. No.: 57809-71-65000

AIR LIQUIDE AMERICA SPECIALTY GASES LLC Project No.: 05-82398-008
1290 COMBERMERE STREET
TROY, MI 48083

Customer

CLEAN AIR ENGINEERING
DON ALLEN
500 W. WOOD STREET
PALATINE IL 60067

ANALYTICAL INFORMATION

This certification was performed according to EPA Traceability Protocol For Assay & Certification of Gaseous Calibration Standards; Procedure G-1; September, 1997.

Cylinder Number: ALM011625 **Certification Date:** 01Dec2009 **Exp. Date:** 30Nov2012
Cylinder Pressure*:** 1925 PSIG

COMPONENT	CERTIFIED CONCENTRATION (Moles)		ANALYTICAL ACCURACY**	TRACEABILITY
METHANE	1,510	PPM	+/- 2%	NIST and VSL
AIR		BALANCE		

*** Do not use when cylinder pressure is below 150 psig.

** Analytical accuracy is based on the requirements of EPA Protocol procedures , September 1997.

REFERENCE STANDARD

TYPE/SRM NO.	EXPIRATION DATE	CYLINDER NUMBER	CONCENTRATION	COMPONENT
NTRM 1000	01Jul2011	K005406	1001. PPM	METHANE

INSTRUMENTATION

INSTRUMENT/MODEL/SERIAL#	DATE LAST CALIBRATED	ANALYTICAL PRINCIPLE
HORIBA/FIA-220/G05000JAS	01Dec2009	FLAME IONIZATION

APPROVED BY: ROBERT LESNIAK

AIR LIQUIDE | Air Liquide America Specialty Gases LLC | SCOTT™

COMPLIANCE CLASS

Dual-Analyzed Calibration Standard

1290 COMBERMERE STREET, TROY, MI 48083 Phone: 248-589-2950 Fax: 248-589-2134

CERTIFICATE OF ACCURACY: EPA Protocol Gas

Assay Laboratory

AIR LIQUIDE AMERICA SPECIALTY GASES LLC
1290 COMBERMERE STREET
TROY, MI 48083

P.O. No.: 56986-71-65000
Project No.: 05-69870-009

Customer

CLEAN AIR ENGINEERING
DON ALLEN
500 W. WOOD STREET
PALATINE IL 60067

ANALYTICAL INFORMATION

This certification was performed according to EPA Traceability Protocol For Assay & Certification of Gaseous Calibration Standards; Procedure G-1; September, 1997.

Cylinder Number: ALM033374 **Certification Date:** 27Oct2008 **Exp. Date:** 27Oct2011
Cylinder Pressure*:** 1900 PSIG

COMPONENT	CERTIFIED CONCENTRATION (Moles)		ANALYTICAL ACCURACY**	TRACEABILITY
METHANE	2,540	PPM	+/- 2%	NIST and NMi
AIR		BALANCE		

*** Do not use when cylinder pressure is below 150 psig.

** Analytical accuracy is based on the requirements of EPA Protocol procedures , September 1997.

REFERENCE STANDARD

TYPE/SRM NO.	EXPIRATION DATE	CYLINDER NUMBER	CONCENTRATION	COMPONENT
NTRM 1000	01Jul2011	K005406	1001. PPM	METHANE

INSTRUMENTATION

INSTRUMENT/MODEL/SERIAL#	DATE LAST CALIBRATED	ANALYTICAL PRINCIPLE
HORIBA/FIA-220/G05000JAS	27Oct2008	FLAME IONIZATION

APPROVED BY: ROBERT LESNIAK

AIR LIQUIDE Air Liquide America Specialty Gases LLC Scott

COMPLIANCE CLASS

Dual-Analyzed Calibration Standard

1290 COMBERMERE STREET, TROY, MI 48083 Phone: 248-589-2950 Fax: 248-589-2134

CERTIFICATE OF ACCURACY: EPA Protocol Gas

Assay Laboratory

AIR LIQUIDE AMERICA SPECIALTY GASES LLC
1290 COMBERMERE STREET
TROY, MI 48083

P.O. No.: 58028-71-65000
Project No.: 05-86284-019

Customer

CLEAN AIR ENGINEERING
DON ALLEN
500 W. WOOD STREET
PALATINE IL 60067

ANALYTICAL INFORMATION

This certification was performed according to EPA Traceability Protocol For Assay & Certification of Gaseous Calibration Standards; Procedure G-1; September, 1997.

Cylinder Number: ALM059469 **Certification Date:** 05Apr2010 **Exp. Date:** 04Apr2013
Cylinder Pressure*:** 2000 PSIG

COMPONENT	CERTIFIED CONCENTRATION (Moles)		ANALYTICAL ACCURACY**	TRACEABILITY
METHANE	4,540	PPM	+/- 2%	NIST and VSL
NITROGEN		BALANCE		

*** Do not use when cylinder pressure is below 150 psig.

** Analytical accuracy is based on the requirements of EPA Protocol procedures , September 1997.

REFERENCE STANDARD

TYPE/SRM NO.	EXPIRATION DATE	CYLINDER NUMBER	CONCENTRATION	COMPONENT
NTRM 1000	01Jul2011	K005406	1001. PPM	METHANE

INSTRUMENTATION

INSTRUMENT/MODEL/SERIAL#	DATE LAST CALIBRATED	ANALYTICAL PRINCIPLE
VARIAN/3400/7506	26Mar2010	TCD/FID

APPROVED BY: ROBERT LESNIAK

Airgas.

CERTIFICATE OF ANALYSIS
Grade of Product: EPA Protocol

Part Number:	E03NI99E15A0391	Reference Number:	54-124193110-6
Cylinder Number:	CC177437	Cylinder Volume:	144 Cu.Ft.
Laboratory:	ASG - Chicago - IL	Cylinder Pressure:	2015 PSIG
Analysis Date:	Oct 08, 2009	Valve Outlet:	660

Expiration Date: Oct 08, 2011

Certification performed in accordance with "EPA Traceability Protocol (Sept. 1997)" using the assay procedures listed. Analytical Methodology does not require correction for analytical interferences. This cylinder has a total analytical uncertainty as stated below with a confidence level of 95%. There are no significant impurities which affect the use of this calibration mixture. All concentrations are on a volume/volume basis unless otherwise noted.
Do Not Use This Cylinder below 150 psig.i.e. 1 Mega Pascal

ANALYTICAL RESULTS

Component	Requested Concentration	Actual Concentration	Protocol Method	Total Relative Uncertainty
NITRIC OXIDE	250.0 PPM	256.8 PPM	G1	+/- 1% NIST Traceable
SULFUR DIOXIDE	250.0 PPM	249.5 PPM	G1	+/- 1% NIST Traceable
NITROGEN	Balance			
Total oxides of nitrogen		256.9 PPM		For Reference Only

CALIBRATION STANDARDS

Type	Lot ID	Cylinder No	Concentration	Expiration Date
NTRM/SO2	08061603	CC254551	247PPM SULFUR DIOXIDE/	Oct 15, 2012
NTRM/NO	1	CC286544	250.6PPM NITRIC OXIDE/NITROGEN	Feb 01, 2011

ANALYTICAL EQUIPMENT

Instrument/Make/Model	Analytical Principle	Last Multipoint Calibration
(FTIR-3)Thermo 6700	FTIR	Sep 29, 2009
(FTIR-3)Thermo 6700	FTIR	Sep 29, 2009

Triad Data Available Upon Request

Notes:

Signature on file

QA Approval

Airgas

Airgas Specialty Gases
12722 S. Wentworth Avenue
Chicago, IL 60628
1-773-785-3000
FAX: 1-773-785-1928
www.airgas.com

CERTIFICATE OF ANALYSIS
Grade of Product: EPA Protocol

Part Number:	E03NI99E15A01Q4	Reference Number:	54-124218515-5
Cylinder Number:	CC208529	Cylinder Volume:	144 Cu.Ft.
Laboratory:	ASG - Chicago - IL	Cylinder Pressure:	2015 PSIG
Analysis Date:	May 18, 2010	Valve Outlet:	660

Expiration Date: May 18, 2012

Certification performed in accordance with "EPA Traceability Protocol (Sept. 1997)" using the assay procedures listed. Analytical Methodology does not require correction for analytical interferences. This cylinder has a total analytical uncertainty as stated below with a confidence level of 95%. There are no significant impurities which affect the use of this calibration mixture. All concentrations are on a volume/volume basis unless otherwise noted.
Do Not Use This Cylinder below 150 psig.i.e. 1 Mega Pascal

ANALYTICAL RESULTS

Component	Requested Concentration	Actual Concentration	Protocol Method	Total Relative Uncertainty
NITRIC OXIDE	115.0 PPM	119.2 PPM	G1	+/- 1% NIST Traceable
SULFUR DIOXIDE	115.0 PPM	114.0 PPM	G1	+/- 1% NIST Traceable
NITROGEN	Balance			
Total oxides of nitrogen		119.2 PPM		For Reference Only

CALIBRATION STANDARDS

Type	Lot ID	Cylinder No	Concentration	Expiration Date
NTRM/SO2	8061603	CC255249	247PPM SULFUR DIOXIDE/	Oct 15, 2012
NTRM/NO	090603	CC287366	250.6PPM NITRIC OXIDE/NITROGEN	Feb 01, 2011

ANALYTICAL EQUIPMENT

Instrument/Make/Model	Analytical Principle	Last Multipoint Calibration
(FTIR-3)Thermo 6700	FTIR	May 14, 2010
(FTIR-3)Thermo 6700	FTIR	May 14, 2010

Triad Data Available Upon Request

Notes:

Aust Stewart

Approved for Release

Airgas

Airgas Specialty Gases
12722 S. Wentworth Avenue
Chicago, IL 60628
1-773-785-3000
FAX: 1-773-785-1928
www.airgas.com

CERTIFICATE OF ANALYSIS
Grade of Product: EPA Protocol

Part Number:	E02NI99E15A0101	Reference Number:	54-124176834-1
Cylinder Number:	SG9198829BAL	Cylinder Volume:	144 Cu.Ft.
Laboratory:	ASG - Chicago - IL	Cylinder Pressure:	2015 PSIG
Analysis Date:	May 12, 2009	Valve Outlet:	350

Expiration Date: May 12, 2012

Certification performed in accordance with "EPA Traceability Protocol (Sept. 1997)" using the assay procedures listed. Analytical Methodology does not require correction for analytical interferences. This cylinder has a total analytical uncertainty as stated below with a confidence level of 95%. There are no significant impurities which affect the use of this calibration mixture. All concentrations are on a volume/volume basis unless otherwise noted.
Do Not Use This Cylinder below 150 psig i.e. 1 Megapascal

ANALYTICAL RESULTS

Component	Requested Concentration	Actual Concentration	Protocol Method	Total Relative Uncertainty
CARBON MONOXIDE	1000 PPM	1004 PPM	G1	+/- 1% NIST Traceable
NITROGEN	Balance			

CALIBRATION STANDARDS

Type	Lot ID	Cylinder No	Concentration	Expiration Date
NTRM/CO	80604	CC255866	1002.4PPM CARBON MONOXIDE/NITROGEN	Apr 15, 2012

ANALYTICAL EQUIPMENT

Instrument/Make/Model	Analytical Principle	Last Multipoint Calibration
Nicolet Nexus	FTIR	May 06, 2009

Triad Data Available Upon Request

Notes:

QA Approval

Airgas

Airgas Speciality Gases
12722 S. Wentworth Avenue
Chicago, IL 60628
1-773-785-3000
FAX: 1-773-785-1928
www.airgas.com

CERTIFICATE OF ANALYSIS
Grade of Product: EPA Protocol

Part Number:	E02NI99E15A3168	Reference Number:	54-124152573-3
Cylinder Number:	CC10518	Cylinder Volume:	144 Cu.Ft.
Laboratory:	ASG - Chicago - IL	Cylinder Pressure:	2015 PSIG
Analysis Date:	Sep 30, 2008	Valve Outlet:	580

Expiration Date: Sep 30, 2011

Certification performed in accordance with "EPA Traceability Protocol (Sept. 1997)" using the assay procedures listed. Analytical Methodology does not require correction for analytical interferences. This cylinder has a total analytical uncertainty as stated below with a confidence level of 95%. There are no significant impurities which affect the use of this calibration mixture. All concentrations are on a volume/volume basis unless otherwise noted.
Do Not Use This Cylinder below 150 psig.i.e. 1 Mega Pascal

ANALYTICAL RESULTS

Component	Requested Concentration	Actual Concentration	Protocol Method	Total Relative Uncertainty
CARBON MONOXIDE	500.0 PPM	502.8 PPM	G1	+/- 1% NIST Traceable
NITROGEN	Balance			

CALIBRATION STANDARDS

Type	Lot ID	Cylinder No	Concentration	Expiration Date
NTRM/CO	5120510	CC179949	495.8PPM CARBON MONOXIDE/	Feb 02, 2009

ANALYTICAL EQUIPMENT

Instrument/Make/Model	Analytical Principle	Last Multipoint Calibration
Nicolet Nexus	FTIR	Sep 08, 2008

Triad Data Available Upon Request

Notes:

QA Approval

Airgas

CERTIFICATE OF ANALYSIS
Grade of Product: EPA Protocol

Airgas Specialty Gases
6421 Mondova Road
Maumee, OH 43537-9760
(419) 893-7226
FAX: (419) 893-2963
www.airgas.com

Part Number:	E02NI99E15A0080	Reference Number:	113-124136020-8
Cylinder Number:	CC10309	Cylinder Volume:	144 Cu.Ft.
Laboratory:	ASG - Maumee - OH	Cylinder Pressure:	2015 PSIG
Analysis Date:	May 08, 2008	Valve Outlet:	350

Expiration Date: May 08, 2011

Certification performed in accordance with "EPA Traceability Protocol (Sept. 1997)" using the assay procedures listed. Analytical Methodology does not require correction for analytical interferences. This cylinder has a total analytical uncertainty as stated below with a confidence level of 95%. There are no significant impurities which affect the use of this calibration mixture. All concentrations are on a volume/volume basis unless otherwise noted.
Do Not Use This Cylinder below 150 psig i.e. 1 Mega Pascal

ANALYTICAL RESULTS

Component	Requested Concentration	Actual Concentration	Protocol Method	Total Relative Uncertainity
CARBON MONOXIDE	250.0 PPM	255.8 PPM	G1	+/- 1% NIST Traceable
NITROGEN	Balance			

CALIBRATION STANDARDS

Type	Lot ID	Cylinder No	Concentration	Expiration Date
NTRM	051204	CC180009	99.43PPM CARBON MONOXIDE/NITROGEN	Feb 02, 2009
NTRM	051205	CC180694	495.6PPM CARBON MONOXIDE/NITROGEN	Feb 02, 2009

ANALYTICAL EQUIPMENT

Instrument/Make/Model	Analytical Principle	Last Multipoint Calibration
022-Horiba VIA-510	NDIR	Apr 16, 2008

Triad Data Available Upon Request

Notes:

QA Approval

SAMPLING EQUIPMENT AUDIT

Plant Name Mesquite Creek Job No. 2011-17001

City/State New Braunfels, Tx Auditor(s) AMD

Test Loc. Eng #1 & #2 Date 2/23/11

BAROMETER

In-House Ref. Barometer 30.29 "Hg vs Field Barometer 30.32 "Hg

Date Compared 2/20/11 Dev. 0.03 "Hg (Max. Allowable Dev.: ± 0.1 "Hg)

Field Barometric Pressure Corrected for Test Location Elevation? (√) ✓
(Note: deduct 0.1" Hg from local NWS *STATION* pressure for each 100' of test location elevation; example: 29.6 - (300'/100 * 0.1) = 29.3" Hg.)

Ref. Therm. Initial Ambient Temp., °F 82°

	Allowable Deviation From Ambient	Ambient Temperature, °F				Audit OK (√)
THERMOMETERS *						
*6 Dry Gas Meter	± 5.4 °F	82	(Meterbox No. 003)			✓
*4 Impinger Exit	± 2.0 °F	81	82	82		✓
Filter Box	± 5.4 °F	N/A				

* Adjust thermometer until acceptable. If it cannot be adjusted, use as back-up. If no backup, record ambient temperature indicated by unadjusted thermometer and label with correction factor (indicate):

THERMOCOUPLES Allowable Deviation from Ambient: ± 8.0°F* (± 2.0°F)**

TC No. / °F	√ OK	TC No. / °F	√ OK	TC No. / °F	√ OK	TC No. / °F	√ OK	TC No. / °F	√ OK
1 / 82	✓	2 / 82	✓	/		/		/	

* ± 8.0 °F = ± 1.5% of ambient absolute temperature.
** (± 2.0 °F if used in saturated or water droplet-laden gas stream.)

ISOKINETIC METERBOX I.D. 003 Gamma (Y) 1.001 ΔH@ 1.772

As Applicable (check): Zero Magnehelics? — Zero/Level Manometer? ✓

Barometric Pressure (P_{bar}) 29.76 Auditor AMD Date 2/23/11

Dry Gas Meter Reading (Cubic Ft.)	Meter Temperature (°F)	Lower and Upper Limits for Audit Gamma
Final 96.617	Final 81	0.96 * Y = 0.961
Initial 73.538	Initial 89	1.04 * Y = 1.041

Dry Gas Volume Metered (Cubic Ft.)	Average Meter Temp. (°F)	Run Time (Base = 10)	
		(Minutes)	(Seconds)
Vm = 22.359	Tm = 85	30	—

0.75 = Ideal Sampling Rate

$$Y_c = \frac{[\text{Min.} + (\text{Sec.} / 60)]}{Vm} * \left[\frac{\{[(29.92) / (460 + 68) * (0.75)^2] * (Tm + 460)\}}{P_{bar}}\right]^{.5}$$

$$Y_c = \frac{[____ + (____ / 60)]}{____} * \left[\frac{0.0319\ (____ + 460)}{____}\right]^{.5} = \underset{\text{Audit Gamma}}{0.9931}$$

Audit Gamma Acceptable (between lower & upper limits)? (√) ✓ Yes ___ No

F-1113 rev. 7-92

PreTest Meterbox Audit

Plant:	Mesquite Creek	**Test Date:**	02/23/11
Location:	Eng 1 & 2	**Auditor:**	AMD/RC
		Project #:	2011-17001

Meterbox I.D.:	003	**Level Manometer:**	Yes
Gamma:	1.001	**Zero Manometer:**	Yes
Delta H@	1.772	**Barometric Pressure:**	29.76

	Audit Time (Min)	Dry Gas Meter Reading (Ft^3)	Dry Gas Meter Temperature (^oF)
Initial Readings =	0.0	73.538	81
Final Readings =	30.0	96.617	89

Run Time (Minutes) **Theta** =	30
Gas Volume Sampled $\mathbf{V_m}$ =	23.0790
Average $\mathbf{T_m}$ =	85.0

	Audit Gamma Limits
Lower Gamma Limit **LGL**=	*0.96 * Y =* 0.961
Upper Gamma Limit **UGL**=	*1.04 * Y =* 1.041

Audit Gamma $\mathbf{Y_c}$ =	**0.9931**
Meter Box Audit =	**Passed**

Ideal Sampling Rate = 0.75

$$Y_c = (Theta/V_m) * [\{(29.92/(460+68) * 0.75^2) * (T_m + 460)\} / P_{bar}]^{0.5}$$

Passed = LGL < Y_c < UGL

Failed = LGL > Y_c or Y_c > UGL

Audit Performed By: _____

S-TYPE PITOT TUBE INSPECTION

Project Number	**2011-17001**		
Pitot Tube Number	**M2-36-1**		
Level	Y	(Y/N)	PASS
Obstructions	N	(Y/N)	PASS
Damaged	N	(Y/N)	PASS
Type of material	SS		
-10 < alpha1 < +10	0.5	Degrees	PASS
-10 < alpha2 < +10	0.5	Degrees	PASS
-5 < Beta1 < +5	0.1	Degrees	PASS
-5 < Beta2 < +5	0.1	Degrees	PASS
z or Gamma	0.0	Degrees	
w or Theta	1.0	Degrees	
A	1.000	Inches	
{z = A Tan (Gamma)} < 0.125	0.000	Inches	PASS
{w = A Tan (Theta)} < 0.03125	0.027	Inches	PASS
$0.1875 < D_t < 0.375$	0.375	Inches	PASS
$1.05\ D_t < P_a < 1.5\ D_t$	0.500	Inches	PASS
$1.05\ D_t < P_b < 1.5\ D_t$	0.500	Inches	PASS
$\lvert P_a - P_b \rvert < 0.0625$	0.000	Inches	PASS
Distance T/C set back > 2.0	2.100	Inches	PASS

alpha1 & alpha 2	are the angles of deflection that faces of the pitot tube are off from the perpendicular line of the traverse axis.
Beta1 & Beta2	are the angles of deflection that faces of the pitot tube from the line parallel to the longitudinal tube axis.
Gamma	is the angle between the line between the two pitot tips and the theoretical level line between the tips.
Theta	is the angle between the two center lines of the pitot faces.
A	is the distance between the two pitot tips.
z	is the distance between the two lengths of the pitot tips.
w	is the distance between the two center lines of each of the pitot tubes.
D_t	is the outside diameter of the tubing used.
P_a & P_b	is the distance between the pitot tube face and the longitudinal tube axis.

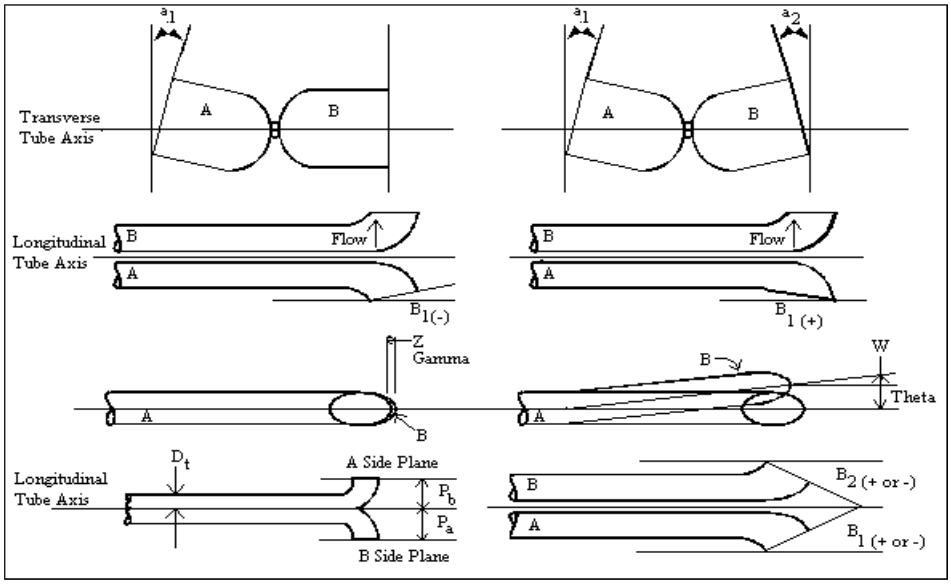

COMMENTS: _____

_____

_____

_____

I certify that this pitot tube meets or exceeds all specifications, criteria and/ or applicable design features and is hereby assigned a pitot tube calibration factor of 0.84.

Signature: _____

Date: _____

NO2-NO CONVERSION EFFICIENCY

RMCEInc-Air Monitoring Division

Manufacture/ Model: TECO 42i-HL
Serial Number: 42iHL-ANSBPCC

Instrument Span: 250
Date Of Test: 2/23/11

RESULTS	
Peak response recorded during converter efficiency test:	25.65 ppm
Response recorded at the end of the 30-minute test:	25.41 ppm
Percent decrease from the peak response:	0.94%
Converter Efficiency:	**99.06%**

SPECIFICATIONS (EPA METHOD 7E): RESPONSE AT 30 MINUTES MUST NOT DECREASE BY MORE THAN 2% OF THE PEAK RESPONSE VALUE.

NO2-NO CONVERTER EFFICIENCY TEST PROCEDURES

RMCEInc-AMD followed the manufacturer's recommended set-up procedures contained in the analyzer manual. After the initial set-up procedures were completed, the electronics of the monitor were adjusted according to the manufacturer's guidelines. The monitor was then calibrated by flowing NO calibration gases into the instrument. A calibration gas was then diluted (1:1) with purified compressed air. The gas mixture was routed through a manifold into a Tedlar bag, which was previously leak tested and evacuated. This arrangement afforded sufficient volume to allow the sampling system to operate for the required 30 minutes. Immediately after the bag was filled, the manifold was connected to the sampling system. The system was turned on and the analyzer response was recorded on a data acquisition system. The one minute averages from the data acquisition system was analyzed for the peak response and the response at the end of the 30-minute sampling period.

EXAMPLE CALCULATIONS
Instrumental Methods

Company: WMRE Mesquite Creek
Source: Engine #1 & #2
Test Location: Exhaust Duct
RMCEInc Project #: 2011-17001

Normal Load: HIGH LOAD
Run: 1
Start Time: 2/23/2011 10:00
End Time: 2/23/2011 11:00
Run Duration (Min.) : 1:00

Volume Of Water Collected (g)

Vlc = (Sil-Gel Total wt. H_2O collected) + (Impingers Volume H_2O collected)

Vlc = 9.6 + 54.0

Vlc = 63.6 g

Volume Of Water Vapor (SCF)

Vwstd = 0.04707 * Vlc

Vwstd = 0.04707 * 63.6

Vwstd = 54.4519 SCF

Dry Mole Fraction Of Flue Gas

Mfd = 1 - (%H_2O/100)

Mfd = 1 - (11.8% / 100)

Mfd = 0.882

Volume Of Dry Gas Sampled @ Standard Conditions - 68F and 29.92"Hg (DSCF)

$$V_{mstd} = Y * Vm * \frac{(Pbar + Delta\ H/13.6)}{Pstd} * \frac{(460 + tstd)}{(460 + tm)}$$

$$V_{mstd} = 1.0010 * 23.079 * \frac{(29.76 + 1.772 / 13.6))}{29.92} * \frac{(460 + 85)}{(460 + 68)}$$

V_{mstd} = 22.3592 DSCF

Percent Moisture, By Volume, As Measured In Flue Gas (%H_20)

%H_2O = 100 * Vwstd / (Vwstd + Vmstd)

%H_2O = 100 * 2.994 / (2.994 + 22.359)

%H_2O = 11.81

FUEL Factor

F_o = (20.9 - %O_{2d}) / %CO_{2d}

F_o = (20.9 - 7.9) / 11.3

F_o = 1.157

Dry Molecular Weight Of The Flue Gas (lb/lb-mole, Dry)

M_d = (%CO_2 * 0.44) + (%O_2 * 0.32) + (N_2 * 0.28)

M_d = (%CO_2 * 0.44) + (%O_2 * 0.32) + ((100 - %O2 - %CO2) * 0.28)

M_d = (11.3 * 0.44) + (7.9 * 0.32) + ((100 - 7.9 - 11.3) * 0.28)

M_d = 30.12 lb/lb-mole, dry

EXAMPLE CALCULATIONS
Instrumental Methods

Company:	WMRE Mesquite Creek	**Normal Load:**	HIGH LOAD
Source:	Engine #1 & #2	**Run:**	1
Test Location:	Exhaust Duct	**Start Time:**	2/23/2011 10:00
RMCEInc Project #:	2011-17001	**End Time:**	2/23/2011 11:00
		Run Duration (Min.) :	1:00

Wet Molecular Weight Of The Flue Gas (lb/lb-mole, Wet)

M_s = (Mfd * Md) + (0.18 * %H_2O)

M_s = (0.882 * 30.12) + (0.18 * 11.8)

M_s = 28.69 lb/lb-mole, wet

Dry Parts Per Million (ppm_d) from a wet Measurement (ppm_w)

VOC ppm_d = VOC ppm_w / Mfd

VOC ppm_d = 493.5 / 0.882

VOC ppm_d = 559.57

Emission Rate (lbs/Hr)

VOC lbs/Hr = 60 * Conv-Factor * VOC ppmd * "Flowrate

VOC lbs/Hr = 559.574119853589 * 60 * 0.0000001145 * "32234

VOC lbs/Hr = 16.999

APPENDIX D. PROCESS DATA

PROCESS DATA

Company: Waste Management - Mesquite Creek
Source: Eng 1 & 2

DATE: 2/23/11

Calculated Data

Start Time		KW	Fuel Flow	Fuel Flow	Heating value	Heat Input	Heat Rate	Air Flow	BTU	CH4 %	O2 %	CO2 %	Hours	ENGINE #
				SCFM at 50% methane	Btu/scf HHV	MMBtu/hr LHV	But/kWhr LHV							
1015	Run 1	1606	570	616	498	15.33	9,547	4251	507.0	49.2	1.59	37.0	1668.3	2
1030		1598	558	603	498	15.01	9,392	4212	507.0					2
1045		1599	561	606	498	15.09	9,437	4177	507.0					2
1100		1578	554	598	498	14.90	9,443	4203	507.0					2
	Average	1595	561	606	498	15.08	9,455	4211	507.0					
1115	Run 2	1594	563	597	495	15.05	9,439	4154	507.0	48.9	1.80	36.9		2
1130		1589	558	591	495	14.91	9,384	4215	507.0					2
1145		1601	563	597	495	15.05	9,397	4279	507.0					2
1200		1596	556	589	495	14.86	9,310	4282	507.0					2
	Average	1595	560	594	495	14.97	9,382	4233	507.0					
1215	Run 3	1569	553	586	498	14.88	9,482	4259	507.0	49.2	1.90	37.0		2
1230		1573	550	583	498	14.80	9,407	4223	507.0					2
1245		1598	547	580	498	14.72	9,209	4217	507.0					2
1300		1587	543	576	498	14.61	9,205	4183	507.0					2
	Average	1582	548	581	498	14.75	9,326	4221	507.0					
1415	Run 1	1591	549	593	508	15.06	9,465	4286	450.0	50.2	1.70	37.3	1672.0	1
1430		1584	548	592	508	15.03	9,489	4311	450.0					1
1445		1605	543	586	508	14.89	9,280	4336	450.0					1
1500		1595	547	591	508	15.00	9,406	4278	450.0					1
	Average	1594	547	590	508	15.00	9,410	4303	450.0					
1515	Run 2	1596	548	581	508	15.05	9,427	4207	450.0	50.2	1.80	37.7		1
1530		1593	536	568	508	14.72	9,238	4314	450.0					1
1545		1598	552	585	508	15.16	9,484	4274	450.0					1
1600		1587	549	582	508	15.07	9,498	4283	450.0					1
	Average	1594	546	579	508	15.00	9,412	4270	450.0					
1615	Run 3	1608	552	585	510	15.20	9,455	4308	511.0	50.4	1.60	37.8		1
1630		1645	559	593	510	15.40	9,360	4347	511.0					1
1645		1700	553	586	510	15.23	8,960	4351	511.0					1
1700		1730	556	589	510	15.31	8,852	4364	511.0					1
	Average	1671	555	588	510	15.29	9,157	4260	511.0					

Calculated:

Heat Input = mmBtu/Hr

$$\text{Heat Input} = \frac{HHV_{dry} * \text{Fuel Flow}}{1{,}000{,}000} \times 0.90$$

$$\text{Heat Input} = \frac{499 * (612*60)}{1{,}000{,}000} \times 0.90$$

Heat Input = 15.33 mmBtu/Hr

LHV used for Heat input calculations

CORE LABORATORIES

201 Deerwood Glen Dr
Deer Park, TX 77536
281-478-1300

RMC Environmental Inc
Rachel Chleborowicz
9226 N 2nd Street
Machesney Park, IL 61115

Report Number : 57801- 110724
Date Reported: 3/14/2011
Date Received: 3/7/2011

Analytical Report

Sample No. 110724-001 **Sample ID Eng # 2** **Date Sampled 2/23/2011**

Mesquite Creek 2011-17001

Test	Result	Units	Method	Date	Analyst
Ultimate Gas Analysis					
Hydrogen	<0.01	Mol %	ASTM D-1945	3/10/2011	KTN
Oxygen	20.13	Mol %			
Nitrogen	71.65	Mol %			
Carbon Dioxide	4.80	Mol %			
Methane	3.42	Mol %			
Ethane	<0.01	Mol %			
Propane	<0.01	Mol %			
Isobutane	<0.01	Mol %			
n-Butane	<0.01	Mol %			
Isopentane	<0.01	Mol %			
n-Pentane	<0.01	Mol %			
Hexanes Plus	<0.01	Mol %			
Total	100.00	Mol %			
Molecular Weight	29.2	Kg/Kg-mole	ASTM D-3588		
Molar Mass Ratio	1.00727				
Relative Density	1.00711				
Compressibility Factor	0.99948				
Gross Heating Value (Dry)	34.5	BTU/CF (Ideal)			
Gross Heating Value (Dry)	34.6	BTU/CF (Real)			
Net Heating Value (Dry)	31.1	BTU/CF (Ideal)			
Net Heating Value (Dry)	31.1	BTU/CF (Real)			
Pressure Base	14.696	psia			
Carbon Content	3.38	WT %	ASTM D-1945		
Hydrogen Content	0.47	WT %			
Oxygen Content	27.34	WT %			
Nitrogen Content	68.81	WT %			
Sulfur Content	<0.01	WT %			
F Factor @ 20C & 29.92 in.	8798	dscf/mmBTU			

The analytical results, opinions or interpretations contained in this report are based upon information and material supplied by the client for whose exclusive and confidential use this report has been made. The analytical results, opinions or interpretations expressed represent the best judgement of Core Laboratories. Core Laboratories, however, makes no warrant or representation, express or implied, of any type, and expressly disclaims same as to the productivity, proper operation or profitableness of any oil, gas, or other mineral property, well or sand in conjunction with which such report is used or relied upon for any reason whatsoever. This report shall not be reproduced, in whole or in part, without the approval of Core Laboratories.

CORE LABORATORIES

201 Deerwood Glen Dr
Deer Park, TX 77536
281-478-1300

RMC Environmental Inc
Rachel Chleborowicz
9226 N 2nd Street
Machesney Park, IL 61115

Report Number : 57801- 110724
Date Reported: 3/14/2011
Date Received: 3/7/2011

Analytical Report

Sample No. 110724-002 **Sample ID Eng # 1** **Date Sampled 2/23/2011**

Mesquite Creek 2011-17001

Test	Result	Units	Method	Date	Analyst
Ultimate Gas Analysis					
Hydrogen	0.16	Mol %	ASTM D-1945	3/10/2011	KTN
Oxygen	1.29	Mol %			
Nitrogen	10.73	Mol %			
Carbon Dioxide	36.49	Mol %			
Methane	51.29	Mol %			
Ethane	<0.01	Mol %			
Propane	0.01	Mol %			
Isobutane	<0.01	Mol %			
n-Butane	<0.01	Mol %			
Isopentane	<0.01	Mol %			
n-Pentane	<0.01	Mol %			
Hexanes Plus	0.03	Mol %			
Total	100.00	Mol %			
Molecular Weight	27.7	Kg/Kg-mole	ASTM D-3588		
Molar Mass Ratio	0.95781				
Relative Density	0.95979				
Compressibility Factor	0.99726				
Gross Heating Value (Dry)	520.3	BTU/CF (Ideal)			
Gross Heating Value (Dry)	521.7	BTU/CF (Real)			
Net Heating Value (Dry)	468.5	BTU/CF (Ideal)			
Net Heating Value (Dry)	469.8	BTU/CF (Real)			
Pressure Base	14.696	psia			
Carbon Content	38.10	WT %	ASTM D-1945		
Hydrogen Content	7.49	WT %			
Oxygen Content	43.57	WT %			
Nitrogen Content	10.84	WT %			
Sulfur Content	<0.01	WT %			
F Factor @ 20C & 29.92 in.	9415	dscf/mmBTU			

The analytical results, opinions or interpretations contained in this report are based upon information and material supplied by the client for whose exclusive and confidential use this report has been made. The analytical results, opinions or interpretations expressed represent the best judgement of Core Laboratories. Core Laboratories, however, makes no warrant or representation, express or implied, of any type, and expressly disclaims same as to the productivity, proper operation or profitableness of any oil, gas, or other mineral property, well or sand in conjunction with which such report is used or relied upon for any reason whatsoever. This report shall not be reproduced, in whole or in part, without the approval of Core Laboratories.

CORE LABORATORIES

201 Deerwood Glen Dr
Deer Park, TX 77536
281-478-1300

RMC Environmental Inc
Rachel Chleborowicz
9226 N 2nd Street
Machesney Park, IL 61115

Report Number : 57801- 110724
Date Reported: 3/14/2011
Date Received: 3/7/2011

Analytical Report

Sample No. 110724-002 **Sample ID Eng # 1** **Date Sampled 2/23/2011**

Mesquite Creek 2011-17001

Test	Result	Units	Method	Date	Analyst

Approved By: M. Jean Waits

M. Jean Waits

The analytical results, opinions or interpretations contained in this report are based upon information and material supplied by the client for whose exclusive and confidential use this report has been made. The analytical results, opinions or interpretations expressed represent the best judgement of Core Laboratories. Core Laboratories, however, makes no warrant or representation, express or implied, of any type, and expressly disclaims same as to the productivity, proper operation or profitableness of any oil, gas, or other mineral property, well or sand in conjunction with which such report is used or relied upon for any reason whatsoever. This report shall not be reproduced, in whole or in part, without the approval of Core Laboratories.

CORE LABORATORIES

Core Laboratories
201 Deerwood Glen Drive
Deer Park, TX 77536
Phone: 281-478-1300
Fax: 281-476-9209

No. 25215

CHAIN OF CUSTODY RECORD

CUSTOMER INFORMATION	PROJECT INFORMATION
COMPANY: RMC ENV, INC	PROJECT NAME/NUMBER: MESQUITE CREEK 2011-17001
SEND REPORT TO: R. CHLEBOWSKI	BILLING INFORMATION
ADDRESS: 9226 N. 2nd St.	BILL TO:
MACHESNEY PK, IL 61115	ADDRESS: PO Box 2131
RMCE@AirMonitoring.com	Atlantic Beach, NC 28512
PHONE: 815-378-6150	PHONE:
FAX: 815-425-1102	FAX: PO NO.:

LAB JOB NO.

SAMPLE NO.	SAMPLE DESCRIPTION	SAMPLE DATE	SAMPLE TIME	SAMPLE MATRIX	CONTAINER	PRESERV.	NUMBER OF CONTAINERS	ANALYSIS / METHOD REQUEST: U14 / Proximate Analysis	F. Fraction Det.						REMARKS / PRECAUTIONS
1	ENG 2	2/23/11		LFG	2198		1	✓	✓						
2	ENG 1	2/23/11		LFG	2190		1	✓	✓						

SAMPLER: R. CHLEBOWSKI

SHIPMENT METHOD:

AIRBILL NO.:

REQUIRED TURNAROUND:* ☐ SAME DAY ☐ 24 HOURS ☐ 48 HOURS ☐ 72 HOURS ☐ 5 DAYS ☐ 10 DAYS ☑ ROUTINE OTHER

1. RELINQUISHED BY:	DATE	2. RELINQUISHED BY:	DATE	3. RELINQUISHED BY:	DATE
SIGNATURE:	2/25/11	SIGNATURE:		SIGNATURE:	
PRINTED NAME/COMPANY: RACHEL CHLEBOWSKI / RMCE INC	TIME 1745	PRINTED NAME/COMPANY:	TIME	PRINTED NAME/COMPANY:	TIME
1. RECEIVED BY:	DATE	2. RECEIVED BY:	DATE	3. RECEIVED BY:	DATE
SIGNATURE:	3-7-11	SIGNATURE:		SIGNATURE:	
PRINTED NAME/COMPANY:	TIME 12:35	PRINTED NAME/COMPANY:	TIME	PRINTED NAME/COMPANY:	TIME

ORIGINAL

APPENDIX E. RESUMES OF TEST PERSONNEL

Rachel Chleborowicz-QSTI

Senior Technical Staff

Primary Role: Sr. Project Manager

Other Role(s): Source Testing
Ambient Monitoring
Laboratory Analysis
Emissions Factors Development
Regulatory Support
Data Analysis

Firm: RMC Environmental, Inc.

Level: Professional Level 4

Experience: 20 years

Education: BS, 1990, Biology and Chemistry, UNC-Chapel Hill

QSTI Certification - 2009

Basis for Selection:

- **Currently Sr. Project Manager on confidential clients' project to characterize air emissions from landfill gas engines around the country.**
- **Served as Sr. Program Manager on over 1250 compliance and source emissions tests encompassing over 12 different source categories.**
- **Managed more than 100 projects conducted to evaluate applicability of current AP-42 factors.**

Ms. Chleborowicz has specialized in source testing and ambient air monitoring for over 20 years. She is responsible for administrative and technical management of RMC Environmental, Inc., a woman owned source testing company headquartered in Chicago, Illinois. Her experience on over 1000 projects for private clients through out the country and Canada includes developing potential air emissions and air pollution emission inventories, conducting compliance assessments, preparing operating permit applications, supporting regulatory development, evaluating regulatory applicability, and performing QA/QC activities for air quality projects.

Relevant Experience:

Source Testing

Evaluated emissions from landfill gas engines, Private Clients. Conducting emissions tests at numerous LFG plants around the US to quantify controlled and uncontrolled emissions as well as determined the destruction efficiencies for combined and individual HAPs.

Evaluated Emissions from Glass Bead Production, Private Client. Conducted testing of total particulate, PM 10 and PM 2.5 emissions from a glass bead production facility – this facility makes the glass beads added to paints to give them their reflective properties. Prepared Site-Specific Test Plans and a Quality Assurance Project Plan (QAPP), field testing, laboratory analyses, data reduction and report preparation.

Evaluated Emissions from Gas turbines, Private Clients. Conducted testing of formaldehyde, benzene and other HAPS emissions from newly installed gas turbines comparing analytical results from EPA Method 0030, the "Chilled Impinger Method" from NCASI, TO-12, TO-15, EPA Method 18 and EPA Method 25A. Prepared Site-Specific Test Plans, field testing, laboratory analyses, data reduction and report preparation.

Evaluated Compliance of Air Emissions from 23 dust collectors, Private Client. Evaluated air emissions from a newly built utility with almost 23 individual dust collectors. Tested these collectors under maximum and minimum production to determine where the manufacturer and consultant varied on the permitted limits. Developed a test protocol acceptable to the regulatory agency and assisted the regulatory agency in calculating applicable and attainable permit limits for the facility.

Development of General Work Plans, and Site-Specific Test Plans (SSTPs), Private Clients. Prepared more than 750 work plans, for clients, ranging from single, routine compliance test programs to complex startups. Prepared more than 225 SSTPs, including projects for clients that included FTIRS, ammonia testing, ambient monitoring and on-site GC/MS.

Ambient Monitoring

Installed and quantified ambient baseline emissions, Private Client. Installed and responsible for four continuous monitoring locations for measuring suspended particulates and gaseous pollutants. Conducted to determine pollutant effects and effects of air pollution on vegetation, surrounding residences and wildlife.

Indoor air quality at US Army Base, Fort Bragg, NC. Responsible for gathering baseline air quality (metals, total particulate, HAPs and VOCs) for tactical / field welding "Pods" for solders working in both enclosed and open "Pods." Selected and procured sampling equipment, and trained us army personnel to operate the equipment, coordinated with US Army personnel, and provided trouble-shooting and support services.

Laboratory Analysis

Managed Routine and Complex Analyses, Private Clients. Responsible for analyses performed in-house by RMC Environmental, Inc. and by outside contract laboratories. Ensures that source emissions samples are analyzed in a manner consistent with EPA reference Methods or other standard methodologies. Samples analyzed include air emission samples, (e.g., particulates, fluorides, H_2S, total VOC, dioxin/furan, trace metals, and PCBs) and process samples (e.g, solid, liquid, and gaseous fuels; inks, paints, solvents; water and wastewater).

Analyzed TSP and PM10 Samples, Private Client. Provide analytical services to support an ambient sampling program at a recently closed hazardous waste landfill. Developed SOPs for TSP and PM10 analyses, provided filter media, and provided gravimetric analyses of the collected samples. Analyzed more than 600 individual samples.

Regulatory Support

Supported Air Standard Development, State Agencies. Regularly provide regulatory support by preparing responses regarding testing and permitting issues, VOC capture efficiency test protocols, sampling and analytical procedures, and review and comment on general policy guidance. Participated in the development of standardized State forms for protocol and report preparation. Have conducting site visits to evaluate with state agencies to evaluate the feasibility of using specific methodologies and enclosures for printing and VOC producing facilities.

Data Analysis

BETA and final testing of PC-based Data Reduction ISOCALC Program, Private Client. Involved in development of PC-based data reduction tool for use in calculating results for EPA Methods 1 through 5. This program is utilized by testing companies and state agencies.

Quality Assured Emissions Test Data Calculations, Private Clients. In the performance of source testing projects, responsible for field and laboratory data reduction, and calculation and tabulation of final results. These projects range in complexity from routine Method 5 compliance tests to more sophisticated calculations for trace metals, dioxin/furan, PCBs, volatile and semi-volatile organics, CEMS, and DRE testing.

Andrew McDermand

Technical Staff

Primary Role: Source Testing

Other Role(s): Ambient Monitoring
Laboratory Analysis
Data Analysis

Firm: RMC Environmental, Inc.

Level: Technical Level 2

Experience: 5 years

Education: AS, 2003, Biology, McHenry County College

Basis for Selection:

- **Currently Assistant Project Manager for Private Client – offset and gravuere printing process for VOC/HAPS and emissions inventory.**
- **Served as Program Manager on over 250 compliance and source emissions tests encompassing over 12 different source categories.**
- **Managed more than 25 projects conducted to evaluate applicability of current AP-42 factors.**

Mr. McDermand has specialized in source testing and ambient air monitoring for over 5 years. He is responsible for overseeing the technical management and source-testing personnel of RMC Environmental, Inc., a woman owned source testing company headquartered in Chicago, Illinois. His experience on over 700 projects for private clients through out the country and Canada includes developing potential air emissions and air pollution emission inventories, conducting compliance assessments, supporting regulatory development, evaluating regulatory applicability, and performing QA/QC activities for air quality projects.

Relevant Experience:

Source Testing

Evaluating VOC / HAPs emissions from Offset and Gravuere Printing Presses, Private Client. Conducting emissions tests at 10 different printing facilities / plants to quantify controlled and uncontrolled emissions as well as determined the destruction efficiencies for individual total VOCs HAPs. Assisting with the optimization of oxidizers associated with these presses to minimize the amount of wasted natural gas thereby lowering the costs associated with running these oxidizers and minimize the Total VOC and HAPS output.

Evaluated Emissions from Glass Bead Production, Private Client. Conducted testing of total particulate, PM 10 and PM 2.5 emissions from a glass bead production facility – this facility makes the glass beads added to paints to give them their reflective properties.

Evaluated Emissions from Engines & Gas turbines, Private Client. Conducted testing of formaldehyde, emissions from eight newly installed gas turbines comparing analytical results from EPA method 0030 and the "Chilled Impinger Method" from NCASI. Prepared Site-Specific Test Plans, field testing, laboratory analyses, data reduction and report preparation.

Evaluated Compliance of Air Emissions from 23 dust collectors, Private Client. Evaluated air emissions from a newly built utility with almost 23 individual dust collectors. Tested these collectors under maximum and minimum production to determine where the manufacturer and consultant varied on the permitted limits. Developed a test protocol acceptable to the regulatory agency and assisted the regulatory agency in calculating applicable and attainable permit limits for the facility.

Development of General Work Plans, and Site-Specific Test Plans (SSTPs), Private Clients. Prepared more than 100 work plans, for clients, ranging from single, routine compliance test programs to complex startups. Prepared more than 50 SSTPs, including projects for clients that included FTIRS, ammonia testing, ambient monitoring and on-site GC/MS.

Ambient Monitoring

Installed and quantified ambient baseline emissions, Private Client. Installed and responsible for four continuous monitoring locations for measuring suspended particulates and gaseous pollutants. Conducted to determine pollutant effects and effects of air pollution on vegetation, surrounding residences and wildlife.

Indoor air quality at US Army Base, Fort Bragg, NC. Managed the baseline air quality testing (metals, total particulate, HAPs and VOCs) for tactical / field welding "Pods" for solders working in both enclosed and open "Pods." Selected and procured sampling equipment, and trained us army personnel to operate the equipment, coordinated with US Army personnel, and provided trouble-shooting and support services.

Laboratory Analysis

Managed Routine and Complex Analyses, Private Clients. Responsible for analyses performed in-house by RMC Environmental, Inc. and by outside contract laboratories. Ensures that source emissions samples are analyzed in a manner consistent with EPA reference Methods or other standard methodologies. Samples analyzed include air emission samples, (e.g., particulates, fluorides, H_2S, total VOC, dioxin/furan, trace metals, and PCBs) and process samples (e.g, solid, liquid, and gaseous fuels; inks, paints, solvents; water and wastewater).

Analyzed TSP and PM10 Samples, Private Client. Provide analytical services to support an ambient sampling program at a recently closed hazardous waste landfill. Developed SOPs for TSP and PM10 analyses, provided filter media, and provided gravimetric analyses of the collected samples. Analyzed more than 100 individual samples.