WEAVER
BOOS
CONSULTANTS
LLC
SOUTHWEST

6420 SOUTHWEST BLVD, SUITE 206
FORT WORTH, TEXAS 76109
PHONE: 817.735.9770
FAX: 817.735.9775
www.weaverboos.com

Chicago, IL
Springfield, IL
Naperville, IL
Griffith, IN
South Bend, IN
Denver, CO
St. Louis, MO
Columbus, OH
Beaverton, OR
Fort Worth, TX

May 6, 2010
Project No. 0086-10-11-72-01

John Sadlier, MC-172
Office of Compliance and Enforcement
Texas Commission on Environmental Quality
12100 Park 35 Circle
Austin, Texas 78753

Re: Initial and Final Control Plans and Performance Test Report for Generator Engines
Westside RDF Landfill Gas-To-Energy Facility
TCEQ Account No. TA-3161-T
RN 101991925 CN 600127856
Tarrant County, Texas

Dear Mr. Sadlier:

On behalf of our client, Waste Management of Texas, Inc. (WM), Weaver Boos Consultants, LLC–Southwest (WBC) is submitting the Initial and Final Control Plan and a copy of the completed Performance Testing Report for three landfill gas (LFG) fueled electric generating engines located at the Westside Recycling and Disposal Facility (RDF). As required by Title 30 Texas Administrative Code (30 TAC) §117.450 and §117.454, the owner or operators of units listed in §117.410(b) at a major source of nitrogen oxides shall submit an Initial and Final Control Plans to the Texas Commission on Environmental Quality (TCEQ) no later than 60 days after becoming subject to §117.410.

WM Renewable Energy, LLC (WMRE) owns and operates the landfill gas-to-energy (LFGTE) facility at the Westside RDF. The site has an active landfill gas collection and control system that operates throughout the landfill. The LFG extracted from the landfill is routed to three generator engines at the facility. The emissions from the generator engines are authorized under Standard Permit No. 81820 issued on June 25, 2007 and revised on November 21, 2008 and October 22, 2009. The engines were installed on March 9, 2010. The Initial and Final Control Plans for the generator engines are included as Attachment 1.

Attachment 2 contains the Performance Testing Report (a.k.a. stack test report) which summarizes the emissions for the three generator engines. The test was completed by RMC Environmental, Inc. on April 27 and April 28, 2010 in accordance with Title 30 Texas Administrative Code (30 TAC) §117.435 and Title 40 of the Code of Federal Regulations

(40 CFR), Part 60, Standards of Performance for New Stationary Sources (NSPS), Subpart JJJJ. As summarized below and referenced from page 2 of the Performance Testing Report, the results of the performance test determined that the engines comply with the requirements within 30 TAC §117.410 paragraphs (b)(4)(B) and (d)(1) and 40 CFR NSPS Subpart JJJJ.

Performance Test Results

Engine Facility Identification Number (FIN)	NO_x Emission Rate (g/BHP-Hr)	CO Emission Rate (g/BHP-Hr)	VOC Emission Rate (g/BHP-Hr)
ENG01	0.54	2.12	0.04
ENG02	0.53	2.02	0.06
ENG03	0.52	2.10	0.05

We trust this information is adequate for TCEQ review. If you have any questions regarding the enclosed information, please feel free to call.

Sincerely,
Weaver Boos Consultants, LLC–Southwest

David Cousins
Staff Engineer

Matt Stutz, P.E.
Principal

Attachments: Attachment 1 – Initial and Final Control Plan
Attachment 2 – Performance Testing Report

cc: Alyssa Taylor, TCEQ – Region 4
David Schanbacher, P.E., TCEQ – Chief Engineer's Office (MC-168)
Paula Carboni, Waste Management of Texas, Inc.
Dave Thorley, P.E., Waste Management of Texas, Inc.
Vic Saufley, Waste Management Renewable Energy, LLC.
Andrew Shafer, P.E., Waste Management of Texas, Inc.

ATTACHMENT 1

INITIAL AND FINAL CONTROL PLANS

INITIAL AND FINAL CONTROL PLAN

WESTSIDE RDF
LANDFILL GAS-TO-ENERGY FACILITY
TARRANT COUNTY, TEXAS
RN101991925 CN600127856

Prepared for

Waste Management Renewable Energy, LLC

May 2010

Prepared by

Weaver Boos Consultants, LLC–Southwest
6420 Southwest Boulevard, Suite 206
Fort Worth, Texas 76109
817-735-9770

Project No. 0086-10-11-72-01

1 INTRODUCTION

1.1 Purpose

As required by Title 30 Texas Administrative Code (30 TAC) §117.450 and §117.454, the owner or operator of units subject to §117.410(b) at a major source of nitrogen oxides shall submit initial and final control plans to the Texas Commission on Environmental Quality (TCEQ) no later than 60 days after becoming subject to §117.410(b).

1.2 Site Background

WM Renewable Energy, LLC (WMRE) owns and operates the landfill gas-to-energy (LFGTE) facility located at the Westside Recycling and Disposal Facility (RDF) in Tarrant County. The landfill has an active landfill gas (LFG) collection and control system that operates throughout the landfill. The LFG extracted from the landfill is routed to three LFG-fueled generator engines at the facility. The emissions from the engines are authorized under Standard Permit No. 81820 issued on June 25, 2007 and revised on November 21, 2008 and October 22, 2009. The engines were installed on March 9, 2010 and this control plan is being submitted according to the schedule in §117.9030(b)(2).

2 INITIAL CONTROL PLAN REQUIREMENTS

The following presents the itemized information required for submittal in accordance with the applicable requirements under 30 TAC §117.450(a).

30 TAC §117.450

(a) The owner or operator of any unit at a major source of nitrogen oxides (NO_X) in the Dallas-Fort Worth eight-hour ozone nonattainment area that is subject to §117.410(b) of this title (relating to Emission Specifications for Eight-Hour Attainment Demonstration) shall submit an initial control plan. The control plan must include:

(1) a list of all combustion units at the account that are listed in §117.410(b) of this title. The list must include for each unit:

(A) the maximum rated capacity;

(B) anticipated annual capacity factor;

(C) estimated or measured NO_X emission data in the units associated with the category of equipment from §117.410(b) of this title;

(D) the method of determination for the NO_X emission data required by subparagraph (C) of this paragraph;

(E) the facility identification number and emission point number as submitted to the Industrial Emissions Assessment Section of the commission; and

(F) the emission point number as listed on the Maximum Allowable Emissions Rate Table of any applicable commission permit;

Three (3) LFG-fueled engine generator sets at the Westside RDF are subject to this requirement. Information for each engine is provided in the table on the following page.

	Engine No. 1	Engine No. 2	Engine No. 3
Maximum Rated Capacity	2,233 bhp	2,233 bhp	2,233 bhp
Anticipated Annual Capacity Factor	100%	100%	100%
Estimated NO_x emissions	0.54 g / hp-hr	0.53 g / hp-hr	0.52 g / hp-hr
Method of determination of NO_x emissions	EPA Method 7E	EPA Method 7E	EPA Method 7E
Facility ID and EPN as submitted in the Emissions Inventory	N/A (New Source)	N/A (New Source)	N/A (New Source)
EPN as listed on any MAER Table*	ENG01	ENG02	ENG03

*The engines are authorized by a 30 TAC §330 Subchapter U Standard Permit and General Operating Permit and do not have an applicable MAERT. The listed EPN's are from the GOP Checklist for Engines approved as GOP No. 03119 on November 21, 2008.

> (2) identification of all units with a claimed exemption from the emission specifications §117.410(b) of this title and the rule basis for the claimed exemption;

There are no units claimed exempt from the 30 TAC §117 requirements.

> (3) identification of the election to use the source cap emission limit as specified in §117.423 of this title (relating to Source Cap) to achieve compliance with this rule and a list of the units to be included in the source cap;

The facility does not elect to use source cap emission limit to achieve compliance with the NO_x emission limits.

> (4) a list of units to be controlled and the type of control to be applied for all such units, including an anticipated construction schedule;

The engines meet the specified NO_x emission limits in 30 TAC §117.410(b), as such, there will be no controls required on the units.

> (5) a list of units requiring operating modifications to comply with §117.430(b) of this title (relating to Operating Requirements) and the type of modification to be applied for all such units, including an anticipated construction schedule;

The engines meet the specified NO_x emission limits in 30 TAC §117.410(b), as such, there will be no operating modifications required.

> (6) for units required to install totalizing fuel flow meters in accordance with §117.440(a) of this title (relating to Continuous Demonstration of Compliance), indication of whether the devices are currently in operation, and if so, whether they have been installed as a result of the requirements of this chapter; and

The facility currently maintains and operates a fuel flow meter or continuous horsepower and hours of operation meters calibrated to manufacturer specifications. The electronic data from the fuel flow meter is stored in a computer, which is an acceptable totalizer, as provided in 30 TAC §117.440(a).

> (7) for units required to install continuous emissions monitoring systems or predictive emissions monitoring systems in accordance with §117.440 of this title, indication of whether the devices are currently in operation, and if so, whether they have been installed as a result of the requirements of this chapter.

The units do not require CEMS or PEMS per 30 TAC §117.440.

> (b) The initial control plan must be submitted to the Office of Compliance and Enforcement, the appropriate regional office, and the Chief Engineer's Office by the applicable date specified for initial control plans in §117.9030(b) of this title (relating to Compliance Schedule for Dallas-Fort Worth Eight-Hour Ozone Nonattainment Area Major Sources).

According to the schedule of §117.9030(b)(2), the initial and final control plans must be submitted no later than 60 days after becoming subject to §117.410(b). The site installed the engines on March 9, 2010 and submitted this control plan within 60 days.

> (c) For units located in Dallas, Denton, Collin, and Tarrant Counties subject to §117.210 of this title (relating to Emission Specifications for Attainment Demonstration), the owner or operator may elect to submit the most recent revision of the final control plan required by §117.254 of this title (relating to Final Control Plan Procedures for Attainment Demonstration Emission Specifications) in lieu of the initial control plan required by subsection (a) of this section.

The generator engines are new units, as such, this report incorporates the requirements for initial control plans.

3 FINAL CONTROL PLAN REQUIREMENTS

The following presents the itemized information required for submittal in accordance with all applicable requirements required by the TCEQ under 30 TAC §117.454.

30 TAC §117.454

(a) The owner or operator of any unit subject to §117.410 of this title (relating to Emission Specifications for Eight-Hour Attainment Demonstrations) at a major source of nitrogen oxides (NO_X) shall submit a final control report to show compliance with the requirements of §117.410 of this title. The report must include:

(1) the section used to demonstrate compliance, either:
(A) §117.410 of this title;
(B) §117.423 of this title (relating to Source Cap); or
(C) §117.9800 of this title (relating to Use of Emission Credits for Compliance);

The performance testing for the three generator engines at the Westside RDF Landfill Gas-To-Energy Facility was conducted on April 27 and April 28, 2010. The results of the performance test determined that the LFGTE engines comply with the requirements under 30 TAC §117.410(b)(4)(B) and (d)(1). The average measured NO_x emission rate during the performance test for each engine was determined to be less than 0.60 g NO_x/ hp-hr and less than 3.0 g CO/ hp-hr.

(2) the method of NO_X control for each unit;

Subsection §117.454(a)(2) is not applicable to the project. The engines meet the specified NO_x emission limits in 30 TAC §117.410(b), as such, there will be no controls required on the units.

(3) the emissions measured by testing required in §117.435 of this title (relating to Initial Demonstration of Compliance);

The emissions measured by the testing required in §117.435 are shown in the table below.

Engine No. 1	0.54 g NO_x / hp-hr
Engine No. 1	2.12 g CO / hp-hr
Engine No. 2	0.53 g NO_x / hp-hr
Engine No. 2	2.02 g CO / hp-hr
Engine No. 3	0.52 g NO_x / hp-hr
Engine No. 3	2.10 g CO / hp-hr

(4) the submittal date, and whether sent to the central or the regional office (or both), of any compliance stack test report or relative accuracy test audit report required by §117.435 of this title that is not being submitted concurrently with the final compliance report; and

This compliance stack test report required by §117.435 is being submitted concurrently with the control plans. The reports are being sent to the TCEQ regional office and the TCEQ central office no later than 60 days after becoming subject to §117.410(b).

(5) the specific rule citation for any unit with a claimed exemption from the emission specification of §117.410 of this title.

Subsection §117.454(a)(5) is not applicable to the project. There are no units claimed exempt from the emission specifications of 30 TAC §117.410.

(b) For sources complying with §117.423 of this title, in addition to the requirements of subsection (a) of this section, the owner or operator shall submit:

(1) the calculations used to calculate the 30-day average and maximum daily source cap allowable emission rates;

(2) a list containing, for each unit in the cap:

(A) the average daily heat input, Hi , specified in §117.423(b)(1) of this title;

(B) the maximum daily heat input, Hmi , specified in §117.423(b)(1) of this title;

(C) the method of monitoring emissions; and

(D) the method of providing substitute emissions data when the NOX monitoring system is not providing valid data; and

(3) an explanation of the basis of the values of H_i and H_{mi}

The facility does not elect to use a source cap emission limitation to achieve compliance with the NO_x emission limits. Therefore, the project is not required to comply with §117.423, and this section is not applicable.

(c) The report must be submitted to the Office of Compliance and Enforcement, the appropriate regional office, and the Chief Engineer's Office by the applicable date specified for final control plans in §117.9030 of this title (relating to Compliance Schedule for Dallas-Fort Worth Eight-Hour Ozone Nonattainment Area Major Sources). The plan must be updated with any emission compliance measurements submitted for units using continuous emissions monitoring system or predictive emissions monitoring system and complying with the source cap rolling 30-day average emission limit, according to the applicable schedule given in §117.9030 of this title.

This report is being submitted to the Office of Compliance and Enforcement, the appropriate regional office, and the Chief Engineer's Office no later than 60 days after becoming subject to §117.410(b) as specified in §117.9030(b)(2).

ATTACHMENT 2

PERFORMANCE TEST REPORT

INITIAL PERFORMANCE TEST
April 2010

As Defined By

Title 40 Code of Federal Regulations Part 60, Subpart JJJJ, Standard Permit for Electric Generating Units, and 30 TAC 117.440 (k)

RMCEINC Project #2010-15969

WASTE MANAGEMENT OF TEXAS, INC.
WESTSIDE LANDFILL
ENGINE PLANT
FORT WORTH, TEXAS

THREE CATERPILLAR 3520 INTERNAL COMBUSTION ENGINES

PREPARED FOR:
WASTE MANAGEMENT OF TEXAS, INC.
Waste Management Renewable Energy

BY:

RMC ENVIRONMENTAL, INC. – CHICAGO REGIONAL OFFICE

REPORT CERTIFICATION

The sampling, analysis, and data collection performed for this report were carried out under my direction and supervision, and I hereby certify that the test report is authentic and accurate, to the best of my knowledge.

Date 5/5/10

Signature

Rachel Chleborowicz, QSTI
Project Manager
RMC ENVIRONMENTAL, INC.

TABLE OF CONTENTS

1.0 PROJECT INFORMATION 1

1.1 Company Information 1
1.2 Testing Firm Information 1
1.3 Test Information 1

2.0 SOURCE IDENTIFICATION 1

3.0 SUMMARY AND DISCUSSION OF RESULTS 2

4.0 POLLUTANTS AND TEST METHODS 3

5.0 TEST PROCEDURES AND RESULTS 3

5.1 Sampling Procedures 3

6.0 EQUIPMENT CALIBRATION AND QUALITY ASSURANCE 7

APPENDIX A. TEST SUMMARY SHEETS ..... A

Emissions Summary

APPENDIX B. FIELD TEST DATA W/ INSTRUMENTAL TEST DATA ..... B

Method 1-4 Field Data
Flow Rate Determinations
Calibration Summaries
Instrumental Test Run Data
Reference Data Summary

APPENDIX C. TEST QA/ QC FORMS C

Calibration Gas Certificates of Analysis
Meterbox Calibrations
Pitot Calibration

APPENDIX D. PROCESS DATA ..... D

APPENDIX E. RESUMES OF TEST PERSONNEL ..... E

1.0 PROJECT INFORMATION

1.1 Company Information

Name and Address:	Waste Management of Texas, Inc. Westside Landfill 12280 Camp Bowie Blvd Fort Worth, Texas 76102
Contact:	Ms. Paula Carboni
Telephone Number:	972-459-1202
Source Tested:	Three IC Engines – Landfill Gas Treatment / Electric Generating Plant

1.2 Testing Firm Information

Name and Address:	RMC ENVIRONMENTAL, INC. 9226 North 2nd Street Machesney Park, Illinois 61115
Contact:	Rachel Chleborowicz
Telephone Number:	815-378-6150 Mobile 815-425-1102 Fax RMCE@AirMonitoring.com / RMCEInc@aol.com

1.3 Test Information

Test Requested By:	Waste Management of Texas, Inc.
Source Contact:	Mr. Phil Keim
Telephone Number:	817-751-5218
Test Objective:	Title 40, Code of Federal Regulations, Part 60, Subpart JJJJ, Compliance and Performance Testing, Standard Permit testing & 30 TAC §117. 440(k).
Test Methods:	EPA Methods 1-4, 3A, 7E, 10 and 25A/18
Test Dates:	April 27-28, 2010
Source Test Coordinators:	Mr. Phil Keim Waste Management, Inc.
Test Personnel:	Rachel Chleborowicz RMCEInc Gregory Chleborowicz RMCEInc
Laboratory Analysis:	Core Laboratories

2.0 SOURCE IDENTIFICATION

Name and Address:	Waste Management of Texas, Inc. Westside Landfill 12280 Camp Bowie Blvd Fort Worth, Texas 76102
Contact:	Mr. Phil Keim
Telephone Number:	817-751-5218
Source Tested:	Three IC Engines – Landfill Gas Treatment / Electric Generating Plant

Fuel:	Landfill Gas
Duct Dimensions:	Height 12' ID – ~15"
Sampling Location:	~ 36" Downstream and ~ 42" Upstream from any flow disturbance

- Senior Project Manager works directly with the site coordinator and the facility's operators during the testing to coordinate the testing. They are also responsible for operating and monitoring the instrumental test methods within the mobile test laboratory.
- The Site Coordinator is the facility's representative for the test program.

3.0 SUMMARY AND DISCUSSION OF RESULTS

The compliance testing results for Waste Management of Texas, Inc. – Westside Landfill are shown in **Table 3-1**. The indicated pollutants are VOC/NMOC, CO and NOx emissions in unit of the emission rate (lb/BHP-Hr). The reference test data are enclosed in **Appendices A & B** and the corresponding process data collected from the engine operations screen and the on-site Gas Chromatograph (GC) are included in **Appendix D**.

This data is an average of the three one-hour test runs conducted on each turbine. Each engine is rated for 2233 horsepower with ~1600 Kw of power produced. The testing was conducted at those levels.

TABLE 3-1. COMPLIANCE TEST RESULTS
April 27 & 28, 2010

Parameter	Result	Permit Limit
Engine #1 – 4/27/10 (EPN/FIN: ENG01)		
Engine #1 – NOx g/BHP-Hr	0.54	30 TAC 117 - 0.6 g NOx / BHP-Hr Subpart JJJJ Specification - 3.0 g NOx/BHP-Hr
NOx lb/Mw-Hr	1.65	Standard Permit - 1.9 lb/Mw-Hr
Engine #1 – CO g/BHP-Hr	2.12	30 TAC 117 - 3.0 g CO / BHP-Hr Subpart JJJJ Specification - 5.0 g CO/BHP-Hr
Engine #1 – VOC g/BHP-Hr	0.04	Subpart JJJJ Specification - 1.0 g VOC/BHP-Hr
Engine #2 – 4/27/10 (EPN/FIN: ENG02)		
Engine #2 – NOx g/BHP-Hr	0.53	30 TAC 117 - 0.6 g NOx / BHP-Hr Subpart JJJJ Specification - 3.0 g NOx/BHP-Hr
NOx lb/Mw-Hr	1.64	Standard Permit - 1.9 lb/Mw-Hr
Engine #2 – CO g/BHP-Hr	2.02	30 TAC 117 - 3.0 g CO / BHP-Hr Subpart JJJJ Specification - 5.0 g CO/BHP-Hr
Engine #2 – VOC g/BHP-Hr	0.06	Subpart JJJJ Specification - 1.0 g VOC/BHP-Hr
Engine #3 – 4/28/10 (EPN/FIN: ENG03)		
Engine #3 – NOx g/BHP-Hr	0.52	30 TAC 117 - 0.6 g NOx / BHP-Hr Subpart JJJJ Specification - 3.0 g NOx/BHP-Hr
NOx lb/Mw-Hr	1.59	Standard Permit - 1.9 lb/Mw-Hr
Engine #3 – CO g/BHP-Hr	2.10	30 TAC 117 - 3.0 g CO / BHP-Hr Subpart JJJJ Specification - 5.0 g CO/BHP-Hr
Engine #3 – VOC g/BHP-Hr	0.05	Subpart JJJJ Specification - 1.0 g VOC/BHP-Hr

4.0 POLLUTANTS AND TEST METHODS

Pollutant Tested:	NO_x	EPA Method 7E – Title 40 CFR 60, Appendix A
	CO	EPA Method 10 – Title 40 CFR 60, Appendix A
	VOC/NMOC	EPA Method 25A/18 – Title 40 CFR 60 Appendix A

5.0 TEST PROCEDURES AND RESULTS

5.1 Sampling Procedures

Testing was completed per EPA Test Methods 1, 2, 3A, 4, 7E, 10 and 25A/18 defined in Title 40 CFR Part 60, Appendix A.

5.10 Volumetric Flow Rates

RMCEINC determined the number and location of the traverse points for volumetric flow rate measurement according to the procedures outlined in EPA Method 1. When determining the location and number of sample points, RMCEINC took into account the number of sample ports, duct configuration, and location of upstream and downstream flow disturbances. **Figures 5-1** is a diagram of the engine showing the exhaust to the silencer and the ports used for testing. **Figure 5-2** presents the EPA Method 1 data sheets illustrating the port locations and the points used for each Method 2 traverse.

The flue gas velocity and volumetric flow rate were determined according to the procedures of EPA Method 2. A Type S pitot tube with a Type K thermocouple was used to measure velocity pressure and stack gas temperature at each sample point. Each pitot tube conformed to the geometric specifications of EPA Method 2 and was assigned a coefficient of 0.84. An umbilical cord connected the pitot tube to the meter box inclined manometer and digital temperature readout. RMCEINC leak-checked the pitot tube prior to and after conducting the traverse.

RMCEINC determined the flue gas composition and molecular weight using EPA Methods 3A and 4 procedures.

Figure 5-1 – Engine Schematic / Diagram.

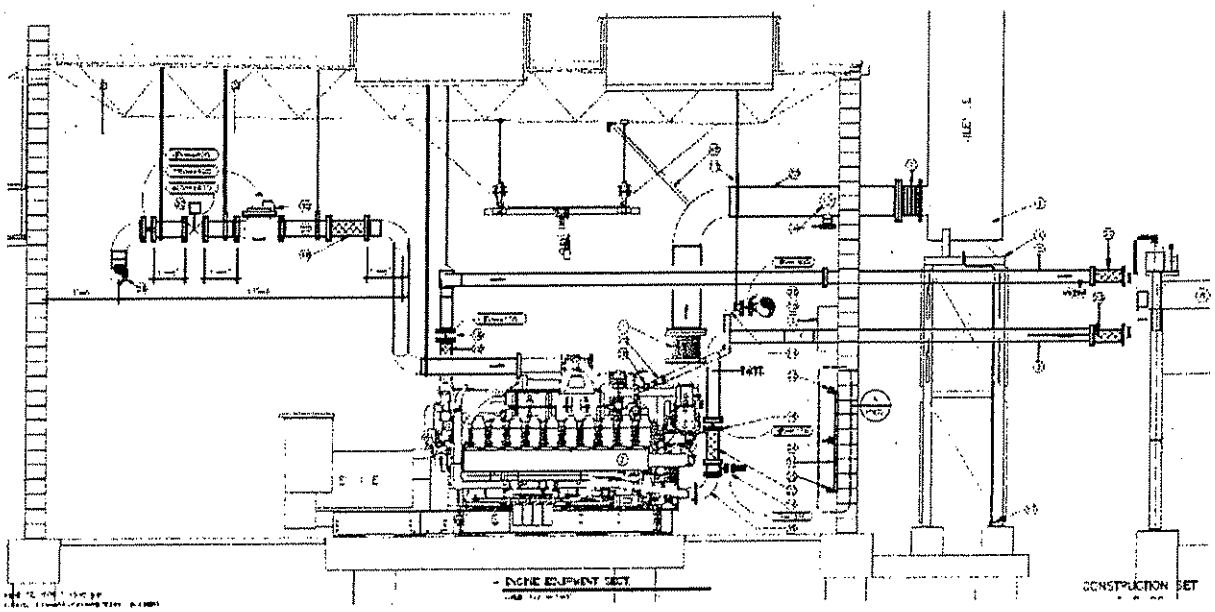

Figure 5-2 – EPA Method 1 Data – Engines 1-3

METHOD 1 - SAMPLE AND VELOCITY TRAVERSES FOR CIRCULAR SOURCES

Plant Name	Westside Landfill	Date	04/27/10
Sampling Location	Engines 1-3	Project #	2010-15969
Operator	RC/GC	# of Ports Available	2
Stack Type	Circular	# of Ports Used	2
Stack Size	Small	Port Inside Diameter	3

Circular Stack or Duct Diameter			
Distance to Far Wall of Stack	(L_{fw})	24.00	in
Distance to Near Wall of Stack	(L_{nw})	8.50	in
(=Lfw - Lnw) Diameter of Stack	(D)	15.50	in
(=3.14(D/2)²/Conv.) Area of Stack	(A_s)	1.31	ft^2

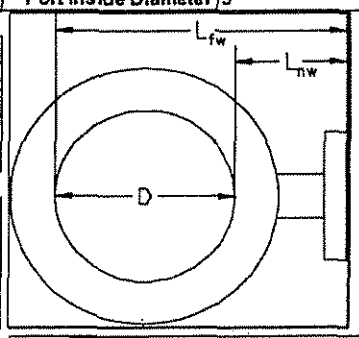

Distance from Port to Disturbances			
Distance Upstream	(B)	36.00	in
(=B/D) Diameters Upstream	(B_D)	2.32	diameters
Distance Downstream	(A)	42.00	in
(=A/D) Diameters Downstream	(A_D)	2.71	diameters

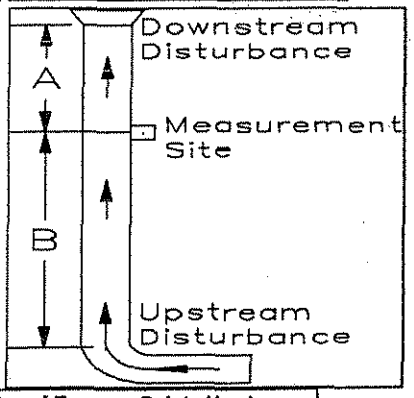

Number of Traverse Points Required			
Diameters to Flow Disturbance		Minimum Number of[1] Traverse Points	
Up Stream	Down Stream	Particulate Points	Velocity Points
2.00-4.99	0.50-1.24	24	16
5.00-5.99	1.25-1.49	20	16
6.00-6.99	1.50-1.74	16	12
7.00-7.99	1.75-1.99	12	12
>= 8.00	>=2.00	8 or 12[2]	8 or 12[2]
Upstream Spec		24	16
Downstream Spec		8	8
Traverse Pts Required		24	16

[1] Check Minimum Number of Points for the Upstream and Downstream conditions, then use the largest.
[2] 8 for Circular Stacks 12 to 24 inches
12 for Circular Stacks over 24 inches

Number of Traverse Points Used			
2	Ports by	8	Across
16	Pts Used	16	Required
☐	Particulate	☑	Velocity

Location of Traverse Points in Circular Stacks						
Traverse Point Number	(Fraction of Stack Diameter from Inside Wall to Traverse Point) Number of Traverse Points on a Diameter					
	2	4	6	8	10	12
1	.146	.067	.044	.032	.026	.021
2	.854	.250	.146	.105	.082	.067
3		.750	.296	.194	.146	.118
4		.933	.704	.323	.226	.177
5			.854	.677	.342	.250
6			.956	.806	.658	.356
7				.895	.774	.644
8				.968	.854	.750
9					.918	.823
10					.974	.882
11						.933
12						.979

Traverse Point Locations			
Traverse Point Number	Fraction of Stack Diameter	Distance from Inside Wall	Distance Including Nipple Length
		in	in
1	0.032	4/8	9
2	0.105	1 5/8	10 1/8
3	0.194	3	11 4/8
4	0.323	5	13 4/8
5	0.677	10 4/8	19
6	0.806	12 4/8	21
7	0.895	13 7/8	22 3/8
8	0.968	15	23 4/8
9			
10			
11			
12			

5.11 Instrumental Test Equipment and Procedures

The test program includes the measurement of exhaust gas concentrations of CO, NO_x, and O_2. RMCEINC used the procedures that conform to the requirements of Title 40 CFR, Part 60, Appendix A, Methods 1, 2, 3A, 4, 7E and 10. Each of the three test runs included a minimum of one hour of continuous flue gas sampling.

Concentration measurements of O_2, CO, NOx and VOC/NMOC, were made according to EPA Methods 3A, 7E, 10 and 25A/18 using the analyzers listed in **Table 5-1. Figure 5-3** is a schematic of the wet/dry extractive reference measurement gas sampling system used by RMCEINC. All components of the sampling system that contact the sample are stainless steel, glass, or Teflon.

A sampling probe provides a method of drawing a continuous sample of flue gases. The probe assembly is temperature controlled to maintain the sample above the dew point and includes a calibration value and sample filter. A temperature controlled Teflon umbilical connects the probe assembly to an ice bath condenser. The condenser is equipped with a condensate discharge pump to continuously remove the condensate from the condenser traps. The dried sample is then transported to the mobile laboratory's sample manifold.

Before the moisture removal system, a portion of the wet effluent is diverted to the THC analyzer. This analyzer requires the sample to be unconditioned which allows for the full THC concentration in the sample to be analyzed. In order to obtain VOC / NMOC (Non-Methane Organic Carbon) concentrations, an onsite, inline GC measured the methane concentrations real-time. The methane concentration was then subtracted from the THC concentration to provide an NMOC result.

TABLE 5-1 REFERENCE METHOD ANALYZERS

Parameter	Analyzer	Analytical Technique	Instrument Span
NO_x	Thermo Environmental Instruments Model 42	Chemiluminescence	0-250, ppm
CO	Thermo Environmental Instruments Model 48	Gas Filter Correlation	0-1000, ppm
VOC / NMOC	VID Industries Model 220/200	FID / GC	0-1000/5000 ppm
O_2	Teledyne – 3300 or Servomex 1440	Fuel Cell / Paramagnetic	0-21 %

5.12 Instrumental Analytical Data

RMCEINC performed test runs to measures the flue gas for VOC/NMOC, NO_x and CO in terms of an emission rate (lb/BHP-Hr). A three-point (zero, mid-range, and high-range) analyzer calibration error check on each reference analyzer was performed before initiating the testing. This check is conducted after final calibration adjustments are made by injecting the calibration gases directly into each gas analyzer and recording the responses on the reference data acquisition system.

RMCEINC conducts zero and upscale calibration checks both before and after each test run in order to quantify measurement system calibration drift and sampling system bias. Upscale is either the low-, mid- or high-range gas, whichever most closely approximates the flue gas level. During these checks, the calibration gases are introduced into the sampling system through a 3-way valve assembly at the probe outlet so that the calibration gases are analyzed in the same manner as the flue gas samples.

RMCEINC recorded the reference analyzer measurements as 1-minute and 60-minute averages on its DAS. All test run concentration results were determined from the average gas concentrations measured during the run and adjusted based on the zero and upscale sampling system bias check results (Equation 7E-1 presented in Title 40 CFR Part 60, Method 7E, Section 8). The reference VOC/NMOC, CO and NO_x emission values in terms of pounds per hour and grams per break horsepower hour were computed from each test run average of adjusted, dry basis VOC/NMOC, CO, NO_x and percent O_2 using the Title 40 CFR Part 60 Appendix A Method 19.

Figure 5-3. Reference Method Gas Sampling System Diagram

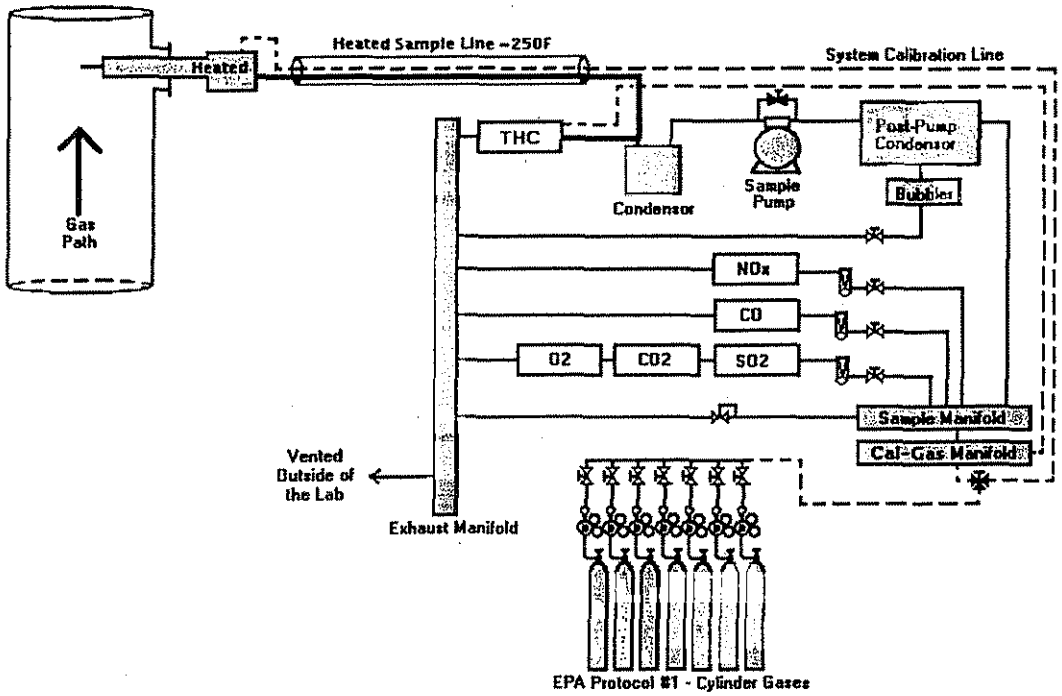

6.0 EQUIPMENT CALIBRATION AND QUALITY ASSURANCE

RMCEINC followed the calibration and quality assurance procedures of EPA Methods 1, 2, 3A, 4, 7E, 10 and 25A/18 throughout the test program. The maintenance for our meterboxes, probes, analyzers and a majority of our other test equipment is performed off site by either Clean Air Engineering or Millenium Instruments. These companies ensure that our equipment is operating correctly and within the specification of the respective methods. All equipment is calibrated in accordance with the EPA Methods and guidelines.

The results of sampling system bias and calibration drift tests for each test run are calculated and presented in the test report. Cylinder gases used during the testing are certified to meet or exceed EPA Protocol 1 requirements. The meter box calibrations, pitot tube inspections, calibration gas certificates of analysis and the analyzer quality assurance checks are included in **Appendix C.**

RMCEINC uses computers throughout the test program. Spreadsheets and software programs are checked in our office for accuracy. Software used by RMCEINC is structured to eliminate human errors in data entry where possible by automating the process. When possible RMCEINC, inputs field data directly into the DAS system and eliminates the hand written field data sheets. These systems provide an accurate measurement of the raw test data and are not used to modify or change test data in any manner. Equations used in these systems are taken directly from the CFR when possible, and notations are provided if originated from an alternate source or customized in any manner.

APPENDIX A. TEST SUMMARY SHEETS

Emissions Summary

REFERENCE DATA SUMMARY

Company: Waste Management of Texas
Source: Westside Landfill

Date: 4/27-28/10
Project #: 2010-15969

	Test Duration 3:45		DATA Link from the DATA Logger																
	Start Time	End Time	O2-1 %	CO-1 ppm	NOx-1 ppm	THC-1 ppm	CH4 ppm	NMOC ppm					NMOC	CO-1	NOx-1	THC-1 lb/mmBtu	CH4	NMOC	Flowrate DSCFM
				Engine 1						Engine 1					Engine 1				Eng 1
1	4/27/2010 9:05	10:05	10.06	560.80	83.54	821.74	2464.00	1.21					0.33	0.745	0.182	1.713	1.874	0.001	4,445.0
2	4/27/2010 10:15	11:15	10.07	549.60	84.91	836.85	2480.00	30.55					8.41	0.730	0.186	1.828	1.888	0.018	4,241.0
3	4/27/2010 11:25	12:25	10.05	548.20	86.62	834.05	2455.80	46.35					12.75	0.728	0.189	1.820	1.867	0.027	4,308.0
				Engine 2						Engine 2					Engine 2				Eng 2
4	4/27/2010 12:35	13:35	10.03	527.60	85.09	851.76	2525.00	30.29					8.31	0.699	0.185	1.771	1.916	0.017	4,305.0
5	4/27/2010 13:45	14:45	10.00	524.90	84.45	836.90	2460.90	49.79					13.63	0.693	0.183	1.817	1.862	0.028	4,397.0
6	4/27/2010 14:55	15:55	10.05	525.00	83.93	855.40	2534.00	32.19					8.85	0.697	0.183	1.867	1.927	0.018	4,298.0
				Engine 3						Engine 3					Engine 3				Eng 3
7	4/28/2010 8:32	9:32	10.12	554.90	81.51	787.66	2321.50	41.48					11.48	0.741	0.179	1.651	1.776	0.024	4,316.0
8	4/28/2010 9:40	10:40	10.07	551.60	83.00	813.29	2427.00	12.88					3.55	0.733	0.181	1.777	1.848	0.007	4,289.0
9	4/28/2010 11:50	12:50	10.04	548.60	83.90	828.72	2456.70	29.45					8.09	0.727	0.183	1.806	1.866	0.017	4,294.0
10		13:56																	
11		15:02																	
12		16:08																	
13		17:14																	
14		18:20																	
15		19:26																	
		AVERAGE	10.05	543.47	84.11	829.60	2458.32	30.47					8.38	0.722	0.184	1.783	1.869	0.017	

	Start Time	End Time	Estimated Wet based measurements corrected from DATA Logger			THC-1 ppm				NOx-1 lb/HP-Hr	CO-1 lb/HP-Hr	NMOC lb/HP-Hr	NOx-1 lb/MWhr	CO-1	NOx-1	THC-1 lbs/Hr	CH4	NMOC	
										Eng 1			Eng 1		Engine 1				
1	4/27/2010 9:05	10:05				744.80				0.54	2.41	0.00	1.66	10.86	2.66	24.98	27.34	0.01	
2	4/27/2010 10:15	11:15				753.30				0.52	2.28	0.05	1.61	10.16	2.58	24.28	26.25	0.24	
3	4/27/2010 11:25	12:25				749.40				0.54	2.59	0.05	1.67	10.29	2.67	24.58	26.41	0.37	
										Eng 2			Eng 2		Engine 2				
4	4/27/2010 12:35	13:35				759.70				0.53	2.51	0.05	1.64	9.90	2.62	25.08	27.13	0.24	
5	4/27/2010 13:45	14:45				745.80				0.54	2.54	0.05	1.66	10.06	2.66	25.17	27.01	0.41	
6	4/27/2010 14:55	15:55				764.00				0.52	2.50	0.05	1.62	9.83	2.58	25.15	27.18	0.26	
										Eng 3			Eng 3		Engine 3				
7	4/28/2010 8:32	9:32				707.00				0.55	2.52	0.07	1.68	10.44	2.52	23.25	25.01	0.34	
8	4/28/2010 9:40	10:40				729.40				0.52	2.50	0.02	1.59	10.31	2.55	23.86	25.98	0.10	
9	4/28/2010 11:50	12:50				740.30				0.52	2.50	0.05	1.61	10.27	2.58	24.34	26.33	0.24	
10		13:56																	
11		15:02																	
12		16:08																	
13		17:14																	
14		18:20																	
15		19:26																	
		AVERAGE				743.74				0.53	2.51	0.05	1.63	10.23	2.60	24.52	26.52	0.25	

APPENDIX B. FIELD TEST DATA W/ INSTRUMENTAL TEST DATA

Method 1-4 Field Data

Flow Rate Determinations

Calibration Summaries

Instrumental Test Run Data

Reference Data Summary

METHOD 4 RUN SUMMARY SHEET

Company: Waste Management of Texas
Source: Westside Landfill - 3520 Cat Engines
Test Location: Engine #1

Load: > 90%

Run:	**M4-R1**	**M4-R2**	**M4-R3**
Flow Runs:	1	2	3
Start Time:	4/27/2010 9:05	4/27/2010 10:15	4/27/2010 11:25
End Time:	4/27/2010 10:05	4/27/2010 11:15	4/27/2010 12:25

RUN DATA

Meter voume start (cu. ft.):	963.830	986.400	9.000
Meter volume finish (cu. ft.):	986.328	1008.689	31.827
Meter calib. factor (Y):	1.0006	1.0006	1.0006
Barometric pressure (in. Hg):	29.79	29.79	29.79
Average Delta-H (in. H2O):	1.73	1.73	1.73
Gas meter temperature (deg F):	80.0	84.0	86.0
Sil-Gel total wt. H2O collected (grams):	6.3	6.0	5.0
Impinger total volume H2O collected (ml):	42	45	48

CALCULATED RESULTS

Gas volume sampled (DSCF)*:	22.009	21.636	22.077
Water vapor volume (SCF)*:	2.273	2.401	2.495
Moisture content (% volume):	**9.4**	**10.0**	**10.2**

* 68 deg F (20 deg C) - 29.92 in. Hg

VOLUMETRIC FLOW RATE DETERMINATION

Company: Waste Management of Texas
Source: Westside Landfill - 3520 Cat Engines
Test Location: Engine #1

Conducted By: GC/RC

Load: > 90%
Run: 1
Start Time: 4/27/2010 9:05
End Time: 4/27/2010 10:05

TEST DATA

Test Point	Delta P (in H2O)	Temp. (Deg F)
A-1	2.800	931
A-2	3.700	931
A-3	3.500	931
A-4	3.800	931
A-5	3.600	931
A-6	3.300	931
A-7	3.200	931
A-8	2.900	931
B-1	3.400	927
B-2	3.500	927
B-3	3.700	927
B-4	3.800	927

Test Point	Delta P (in H2O)	Temp. (Deg F)
B-5	3.500	927
B-6	3.300	927
B-7	3.100	927
B-8	2.700	927

Duct Area:	188.7	(A)	sq. inches
Barometric Pressure:	29.79	(Pbar)	inches Hg
Static Pressure:	-5.90	(PG)	inches H2O
Pitot Tube Coefficient:	0.84	(Cp)	
Percent O2:	9.7	% O2	
Percent CO2:	12.7	% CO2	
Percent Nitrogen:	77.6	% N2	
Percent Moisture:	9.4	$\%H_2O$	
Average Delta P:	3.36		inches H2O
Root Mean Sq. Delta P:	3.35	(Pavg)	inches H2O
Mean Temperature:	929.0	(Ts)	Degrees F
Number Of Traverse Points:	16		

CALCULATIONS

DRY MOLE FRACTION OF STACK GAS: $Mfd = 1 - (\%H_2O / 100)$	Mfd =	0.906	
ABSOLUTE STACK GAS PRESSURE: $Ps = Pbar + (Pg / 13.6)$	Ps =	29.36	in. Hg
DRY MOLECULAR WEIGHT OF STACK GAS: $Md = 0.44 (\%CO_2) + 0.32 (\%O_2) + 0.28 (\%N_2)$	Md =	30.42	lb/lb-mole
WET MOLECULAR WEIGHT OF STACK GAS: $Ms = (Md)(Mfd) + 0.18 (\%H_2O)$	Ms =	29.26	lb/lb-mole
AVERAGE STACK GAS VELOCITY: $Vs = 85.49(Cp) X \{(Pavg)(Ts + 460)/[(Ps)(Ms)]\}^{\wedge 0.5}$	Vs =	167.2	ft/sec
DRY VOLUMETRIC FLOW RATE: $Qsd = 7.353(60)(Mfd)(Vs)(A)(Ps) / (Ts + 460)$	Qsd =	4,445	DSCFM (DRY)
WET VOLUMETRIC FLOW RATE: $Qsw = Qsd / Mfd$	Qaw =	4,904.2	SCFM (WET)

VOLUMETRIC FLOW RATE DETERMINATION

Company: Waste Management of Texas
Source: Westside Landfill - 3520 Cat Engines
Test Location: Engine #1

Conducted By: GC/RC

Load: > 90%
Run: 2
Start Time: 4/27/2010 10:15
End Time: 4/27/2010 11:15

TEST DATA

Test Point	Delta P (in H2O)	Temp. (Deg F)	Test Point	Delta P (in H2O)	Temp. (Deg F)
A-1	2.500	931	B-5	3.700	933
A-2	3.100	931	B-6	3.500	933
A-3	3.100	931	B-7	3.100	933
A-4	3.800	931	B-8	2.800	933
A-5	3.500	931			
A-6	2.800	931			
A-7	2.700	931			
A-8	2.700	931			
B-1	2.500	933			
B-2	3.100	933			
B-3	3.300	933			
B-4	3.500	933			

Duct Area:	188.7	(A)	sq. inches
Barometric Pressure:	29.79	(Pbar)	inches Hg
Static Pressure:	-5.00	(PG)	inches H2O
Pitot Tube Coefficient:	0.84	(Cp)	
Percent O2:	10.0	% O2	
Percent CO2:	13.0	% CO2	
Percent Nitrogen:	77.0	% N2	
Percent Moisture:	10.0	$\%H_2O$	
Average Delta P:	3.11		inches H2O
Root Mean Sq. Delta P:	3.09	(Pavg)	inches H2O
Mean Temperature:	932.0	(Ts)	Degrees F
Number Of Traverse Points:	16		

CALCULATIONS

DRY MOLE FRACTION OF STACK GAS: $Mfd = 1 - (\%H_2O / 100)$	Mfd =	0.900	
ABSOLUTE STACK GAS PRESSURE: $Ps = Pbar + (Pg / 13.6)$	Ps =	29.42	in. Hg
DRY MOLECULAR WEIGHT OF STACK GAS: $Md = 0.44 (\%CO_2) + 0.32 (\%O_2) + 0.28 (\%N_2)$	Md =	30.48	lb/lb-mole
WET MOLECULAR WEIGHT OF STACK GAS: $Ms = (Md)(Mfd) + 0.18 (\%H_2O)$	Ms =	29.23	lb/lb-mole
AVERAGE STACK GAS VELOCITY: $Vs = 85.49(Cp) X \{(Pavg)(Ts + 460)/[(Ps)(Ms)]\}^{0.5}$	Vs =	160.7	ft/sec
DRY VOLUMETRIC FLOW RATE: $Qsd = 7.353(60)(Mfd)(Vs)(A)(Ps) / (Ts + 460)$	Qsd =	4,241	DSCFM (DRY)
WET VOLUMETRIC FLOW RATE: $Qsw = Qsd / Mfd$	Qaw =	4,711.9	SCFM (WET)

VOLUMETRIC FLOW RATE DETERMINATION

Company: Waste Management of Texas
Source: Westside Landfill - 3520 Cat Engines
Test Location: Engine #1

Conducted By: GC/RC

Load: > 90%
Run: 3
Start Time: 4/27/2010 11:25
End Time: 4/27/2010 12:25

TEST DATA

Test Point	Delta P (in H2O)	Temp. (Deg F)	Test Point	Delta P (in H2O)	Temp. (Deg F)
A-1	2.900	933	B-5	3.400	933
A-2	3.400	933	B-6	3.400	933
A-3	3.500	933	B-7	3.300	933
A-4	3.300	933	B-8	2.800	933
A-5	3.200	933			
A-6	3.000	933			
A-7	2.900	933			
A-8	2.800	933			
B-1	3.000	933			
B-2	3.300	933			
B-3	3.500	933			
B-4	3.700	933			

Duct Area:	188.7	(A)	sq. inches
Barometric Pressure:	29.79	(Pbar)	inches Hg
Static Pressure:	-5.50	(PG)	inches H2O
Pitot Tube Coefficient:	0.84	(Cp)	
Percent O2:	10.0	% O2	
Percent CO2:	13.0	% CO2	
Percent Nitrogen:	77.0	% N2	
Percent Moisture:	10.2	$\%H_20$	
Average Delta P:	3.21		inches H2O
Root Mean Sq. Delta P:	3.21	(Pavg)	inches H2O
Mean Temperature:	933.0	(Ts)	Degrees F
Number Of Traverse Points:	16		

CALCULATIONS

DRY MOLE FRACTION OF STACK GAS: $Mfd = 1 - (\%H_2O / 100)$	Mfd =	0.898	
ABSOLUTE STACK GAS PRESSURE: $Ps = Pbar + (Pg / 13.6)$	Ps =	29.39	in. Hg
DRY MOLECULAR WEIGHT OF STACK GAS: $Md = 0.44 (\%CO_2) + 0.32 (\%O_2) + 0.28 (\%N_2)$	Md =	30.48	lb/lb-mole
WET MOLECULAR WEIGHT OF STACK GAS: $Ms = (Md)(Mfd) + 0.18 (\%H_2O)$	Ms =	29.21	lb/lb-mole
AVERAGE STACK GAS VELOCITY: $Vs = 85.49(Cp) X \{(Pavg)(Ts + 460)/[(Ps)(Ms)]\}^{0.5}$	Vs =	163.8	ft/sec
DRY VOLUMETRIC FLOW RATE: $Qsd = 7.353(60)(Mfd)(Vs)(A)(Ps) / (Ts + 460)$	Qsd =	4,308	DSCFM (DRY)
WET VOLUMETRIC FLOW RATE: $Qsw = Qsd / Mfd$	Qaw =	4,794.6	SCFM (WET)

METHOD 4 RUN SUMMARY SHEET

Company: Waste Management of Texas
Source: Westside Landfill - 3520 Cat Engines
Test Location: Engine #2 Load: > 90%

Run:	**M4-R1**	**M4-R2**	**M4-R3**
Flow Runs:	1	2	3
Start Time:	04/27/10 12:35	04/27/10 13:45	04/27/10 14:55
End Time:	04/27/10 13:35	04/27/10 14:45	04/27/10 15:55

RUN DATA

Meter voume start (cu. ft.):	32.000	55.000	78.100
Meter volume finish (cu. ft.):	54.885	77.988	101.246
Meter calib. factor (Y):	1.0006	1.0006	1.0006
Barometric pressure (in. Hg):	29.79	29.79	29.79
Average Delta-H (in. H2O):	1.73	1.73	1.73
Gas meter temperature (deg F):	87.0	89.0	91.0
Sil-Gel total wt. H2O collected (grams):	4.9	5.4	5.5
Impinger total volume H2O collected (ml):	52	52	51

CALCULATED RESULTS

Gas volume sampled (DSCF)*:	22.092	22.111	22.182
Water vapor volume (SCF)*:	2.678	2.702	2.659
Moisture content (% volume):	**10.8**	**10.9**	**10.7**

* 68 deg F (20 deg C) - 29.92 in. Hg

VOLUMETRIC FLOW RATE DETERMINATION

Company: Waste Management of Texas
Source: Westside Landfill - 3520 Cat Engines
Test Location: Engine #2

Conducted By: GC/RC

Load: > 90%
Run: 1
Start Time: 4/27/2010 12:35
End Time: 4/27/2010 13:35

TEST DATA

Test Point	Delta P (in H2O)	Temp. (Deg F)	Test Point	Delta P (in H2O)	Temp. (Deg F)
A-1	3.100	928	B-5	3.100	930
A-2	3.300	928	B-6	2.800	930
A-3	3.400	928	B-7	3.000	930
A-4	3.900	928	B-8	3.000	930
A-5	4.100	928			
A-6	3.300	928			
A-7	2.900	928			
A-8	2.700	928			
B-1	3.100	930			
B-2	3.300	930			
B-3	3.500	930			
B-4	3.300	930			

Duct Area:	188.7	(A)	sq. inches
Barometric Pressure:	29.79	(Pbar)	inches Hg
Static Pressure:	-5.20	(PG)	inches H2O
Pitot Tube Coefficient:	0.84	(Cp)	
Percent O2:	9.9	% O2	
Percent CO2:	12.9	% CO2	
Percent Nitrogen:	77.2	% N2	
Percent Moisture:	10.8	$\%H_2O$	
Average Delta P:	3.24		inches H2O
Root Mean Sq. Delta P:	3.23	(Pavg)	inches H2O
Mean Temperature:	929.0	(Ts)	Degrees F
Number Of Traverse Points:	16		

CALCULATIONS

DRY MOLE FRACTION OF STACK GAS: $Mfd = 1 - (\%H_2O / 100)$	Mfd =	0.892	
ABSOLUTE STACK GAS PRESSURE: $Ps = Pbar + (Pg / 13.6)$	Ps =	29.41	in. Hg
DRY MOLECULAR WEIGHT OF STACK GAS: $Md = 0.44 (\%CO_2) + 0.32 (\%O_2) + 0.28 (\%N_2)$	Md =	30.46	lb/lb-mole
WET MOLECULAR WEIGHT OF STACK GAS: $Ms = (Md)(Mfd) + 0.18 (\%H_2O)$	Ms =	29.11	lb/lb-mole
AVERAGE STACK GAS VELOCITY: $Vs = 85.49(Cp) X \{(Pavg)(Ts + 460)/[(Ps)(Ms)]\}^{0.5}$	Vs =	164.3	ft/sec
DRY VOLUMETRIC FLOW RATE: $Qsd = 7.353(60)(Mfd)(Vs)(A)(Ps) / (Ts + 460)$	Qsd =	4,305	DSCFM (DRY)
WET VOLUMETRIC FLOW RATE: $Qsw = Qsd / Mfd$	Qaw =	4,827.4	SCFM (WET)

VOLUMETRIC FLOW RATE DETERMINATION

Company: Waste Management of Texas
Source: Westside Landfill - 3520 Cat Engines
Test Location: Engine #1

Conducted By: GC/RC

Load: > 90%
Run: 2
Start Time: 4/27/2010 13:45
End Time: 4/27/2010 14:45

TEST DATA

Test Point	Delta P (in H2O)	Temp. (Deg F)	Test Point	Delta P (in H2O)	Temp. (Deg F)
A-1	3.200	932	B-5	3.900	928
A-2	3.400	932	B-6	3.200	928
A-3	3.500	932	B-7	3.000	928
A-4	3.400	932	B-8	3.100	928
A-5	3.900	932			
A-6	3.900	932			
A-7	3.300	932			
A-8	2.900	932			
B-1	3.100	928			
B-2	3.300	928			
B-3	3.500	928			
B-4	3.600	928			

Duct Area:	188.7	(A)	sq. inches
Barometric Pressure:	29.79	(Pbar)	inches Hg
Static Pressure:	-5.50	(PG)	inches H2O
Pitot Tube Coefficient:	0.84	(Cp)	
Percent O2:	9.7	% O2	
Percent CO2:	13.2	% CO2	
Percent Nitrogen:	77.1	% N2	
Percent Moisture:	10.9	$\%H_2O$	
Average Delta P:	3.39		inches H2O
Root Mean Sq. Delta P:	3.38	(Pavg)	inches H2O
Mean Temperature:	930.0	(Ts)	Degrees F
Number Of Traverse Points:	16		

CALCULATIONS

DRY MOLE FRACTION OF STACK GAS: $Mfd = 1 - (\%H_2O / 100)$	Mfd =	0.891	
ABSOLUTE STACK GAS PRESSURE: $Ps = Pbar + (Pg / 13.6)$	Ps =	29.39	in. Hg
DRY MOLECULAR WEIGHT OF STACK GAS: $Md = 0.44 (\%CO_2) + 0.32 (\%O_2) + 0.28 (\%N_2)$	Md =	30.50	lb/lb-mole
WET MOLECULAR WEIGHT OF STACK GAS: $Ms = (Md)(Mfd) + 0.18 (\%H_2O)$	Ms =	29.14	lb/lb-mole
AVERAGE STACK GAS VELOCITY: $Vs = 85.49(Cp) X \{(Pavg)(Ts + 460)/[(Ps)(Ms)]\}^{0.5}$	Vs =	168.2	ft/sec
DRY VOLUMETRIC FLOW RATE: $Qsd = 7.353(60)(Mfd)(Vs)(A)(Ps) / (Ts + 460)$	Qsd =	4,397	DSCFM (Dry)
WET VOLUMETRIC FLOW RATE: $Qsw = Qsd / Mfd$	Qaw =	4,934.4	SCFM (WET)

VOLUMETRIC FLOW RATE DETERMINATION

Company: Waste Management of Texas
Source: Westside Landfill - 3520 Cat Engines
Test Location: Engine #1

Conducted By: GC/RC

Load: > 90%
Run: 3
Start Time: 4/27/2010 14:55
End Time: 4/27/2010 15:55

TEST DATA

Test Point	Delta P (in H2O)	Temp. (Deg F)	Test Point	Delta P (in H2O)	Temp. (Deg F)
A-1	3.200	931	B-5	3.500	933
A-2	3.500	931	B-6	3.400	933
A-3	3.600	931	B-7	3.200	933
A-4	3.400	931	B-8	2.800	933
A-5	3.700	931			
A-6	3.500	931			
A-7	3.200	931			
A-8	2.900	931			
B-1	3.100	933			
B-2	3.400	933			
B-3	3.900	933			
B-4	3.700	933			

Duct Area:	188.7	(A)	sq. inches
Barometric Pressure:	29.79	(Pbar)	inches Hg
Static Pressure:	-5.00	(PG)	inches H2O
Pitot Tube Coefficient:	0.84	(Cp)	
Percent O2:	9.7	% O2	
Percent CO2:	13.0	% CO2	
Percent Nitrogen:	77.3	% N2	
Percent Moisture:	10.7	$\%H_20$	
Average Delta P:	3.38		inches H2O
Root Mean Sq. Delta P:	3.37	(Pavg)	inches H2O
Mean Temperature:	932.0	(Ts)	Degrees F
Number Of Traverse Points:	16		

CALCULATIONS

DRY MOLE FRACTION OF STACK GAS: $Mfd = 1 - (\%H_2O / 100)$	Mfd =	0.893	
ABSOLUTE STACK GAS PRESSURE: $Ps = Pbar + (Pg / 13.6)$	Ps =	29.42	in. Hg
DRY MOLECULAR WEIGHT OF STACK GAS: $Md = 0.44 (\%CO_2) + 0.32 (\%O_2) + 0.28 (\%N_2)$	Md =	30.47	lb/lb-mole
WET MOLECULAR WEIGHT OF STACK GAS: $Ms = (Md)(Mfd) + 0.18 (\%H_2O)$	Ms =	29.13	lb/lb-mole
AVERAGE STACK GAS VELOCITY: $Vs = 85.49(Cp) X \{(Pavg)(Ts + 460)/[(Ps)(Ms)]\}^{\wedge 0.5}$	Vs =	168.0	ft/sec
DRY VOLUMETRIC FLOW RATE: $Qsd = 7.353(60)(Mfd)(Vs)(A)(Ps) / (Ts + 460)$	Qsd =	4,398	DSCFM (Dry)
WET VOLUMETRIC FLOW RATE: $Qsw = Qsd / Mfd$	Qaw =	4,925.8	SCFM (WET)

Calibration Error Test at Run 1 . STRATA Version 2.01

Operator:	RMC Environmental, Inc.
Plant Name:	WMI-Westside
Location:	Engine Outlet

Reference Cylinder Numbers

	Zero	Low-range	Mid-range	High-range
O2-1	CC177437		CC22223	CC147760
CO-1	CC22223	CC10309	CC10518	SG9198829
NOx-1	CC22223	CC131936	SG9150522	CC177437
THC-1	CC22223	SG9102081	CC214403	CC21153
CH4-1	CC22223	CC161935	AAL19091	ALM059469

Date/Time	4/27/2010	8:47:33 PASSED			
Analyte	O2-1	CO-1	NOx-1	THC-1	CH4-1
Units	%	ppm	ppm	ppm	ppm
Zero Ref Cyl	0.00	0.00	0.00	0.00	0.00
Zero Avg	0.15	9.30	3.18	2.10	21.30
Zero Error%	0.70	0.90	1.30	0.20	0.40
Low Ref Cyl		255.80	50.98	300.00	1500.00
Low Avg		263.80	52.91	300.70	1508.00
Low Error%		0.80	0.80	0.10	0.20
Mid Ref Cyl	12.49	502.80	115.40	499.60	2510.00
Mid Avg	12.66	501.80	115.16	500.50	2480.10
Mid Error%	0.80	0.10	0.10	0.10	0.60
High Ref Cyl	20.85	1004.00	256.90	842.90	4540.00
High Avg	20.80	1000.60	258.62	838.30	4543.60
High Error%	0.30	0.30	0.70	0.50	0.10

Initial System Bias Check for Run 1 . STRATA Version 2.01

Operator:	RMC Environmental, Inc.	
Plant Name:	WMI-Westside	
Location:	Engine Outlet	
	Reference Cylinder Numbers	
	Zero	Span
O2-1	CC177437	CC22223
CO-1	CC22223	CC10518
NOx-1	CC22223	SG9150522
THC-1	CC22223	CC214403
CH4-1	CC22223	AAL19091

Date/Time	4/27/2010	8:59:09 PASSED			
Analyte	O2-1	CO-1	NOx-1	THC-1	CH4-1
Units	%	ppm	ppm	ppm	ppm
Zero Ref Cyl	0.00	0.00	0.00	0.00	0.00
Zero Cal	0.15	9.30	3.18	2.10	21.30
Zero Avg	0.45	8.80	6.01	9.30	22.50
Zero Bias%	1.40	0.00	1.10	0.70	0.00
Zero Drift%					
Span Ref Cyl	12.49	502.80	115.40	499.60	2510.00
Span Cal	12.66	501.80	115.16	500.50	2480.10
Span Avg	12.72	485.40	116.93	505.30	2475.10
Span Bias%	0.30	1.60	0.70	0.50	0.10
Span Drift%					

Test Run 1 Begin. STRATA Version 2.01
Operator: RMC Environmental, Inc.
Plant Name: WMI-Westside
Location: Engine Outlet

		O2-1	CO-1	NOx-1	THC-1	CH4-1
		%	ppm	ppm	ppm	ppm
Begin calculating run averages						
4/27/2010	9:06:41	10.301	553	88.07	658.5	2330.55
4/27/2010	9:07:41	10.315	549.3	85.61	666.3	2286.75
4/27/2010	9:08:40	10.315	550.3	86.08	682.5	2414.05
4/27/2010	9:09:41	10.295	551.2	86.65	655.6	2412.65
4/27/2010	9:10:42	10.264	552	87.02	661	2380.55
4/27/2010	9:11:41	10.327	550.6	85.38	681	2410.15
4/27/2010	9:12:41	10.359	552.7	88.29	686.4	2402.95
4/27/2010	9:13:40	10.299	548	84.55	687.6	2354.15
4/27/2010	9:14:41	10.344	552.5	87.85	693.1	2364.25
4/27/2010	9:15:41	10.313	550	86.41	687.5	2346.45
4/27/2010	9:16:40	10.294	545.9	84.14	700.4	2357.15
4/27/2010	9:17:41	10.314	551.2	87.32	714	2359.25
4/27/2010	9:18:42	10.31	550.7	87.28	741	2365.95
4/27/2010	9:19:40	10.307	543.8	83.96	750.9	2365.55
4/27/2010	9:20:41	10.263	544.9	83.44	763.4	2374.45
4/27/2010	9:21:42	10.268	550.1	85.72	737.9	2377.55
4/27/2010	9:22:40	10.281	547.7	85.2	788.3	2384.95
4/27/2010	9:23:41	10.267	547.3	84.89	756.1	2384.55
4/27/2010	9:24:40	10.262	544.7	83.84	727.4	2403.05
4/27/2010	9:25:41	10.25	547.5	84.98	720.3	2360.45
Begin Traverse						
4/27/2010	9:26:42	10.276	551	86.1	743.4	2396.35
4/27/2010	9:27:40	10.253	550.9	86.91	748.5	2406.45
4/27/2010	9:28:41	10.272	551.1	88.12	739.3	2429.65
4/27/2010	9:29:40	10.278	547.6	86.85	765	2431.75
4/27/2010	9:30:41	10.249	550.6	87.02	766.9	2468.15
4/27/2010	9:31:42	10.243	550.1	87.79	775	2481.15
4/27/2010	9:32:41	10.249	548.3	86.99	797.7	2485.75
4/27/2010	9:33:41	10.251	547.2	86.57	810.2	2459.95
4/27/2010	9:34:40	10.257	546.9	86.98	819.7	2453.95
4/27/2010	9:35:41	10.259	546.5	85.75	814.7	2463.75
4/27/2010	9:36:40	10.26	546.8	86.15	816.2	2459.45
4/27/2010	9:37:41	10.239	551.5	87.31	807.9	2416.45
4/27/2010	9:38:41	10.25	551	87.97	805.2	2455.05
4/27/2010	9:39:40	10.243	549.5	87.03	723.2	2459.25
4/27/2010	9:40:40	10.245	546.1	85.76	718.2	2575.75
4/27/2010	9:41:41	10.233	545.1	85.33	726.8	2597.15
4/27/2010	9:42:40	10.219	553.6	89.5	737.2	2567.75
4/27/2010	9:43:41	10.235	554	90.61	737.3	2569.15
4/27/2010	9:44:40	10.233	544.9	85.72	730.5	2563.15

4/27/2010	9:45:41	10.24	546.8	85.6	737	2572.95
Begin Traverse						
4/27/2010	9:46:41	10.24	551.4	88.94	743.4	2589.85
4/27/2010	9:47:40	10.249	549.9	88.74	762.3	2632.75
4/27/2010	9:48:42	10.256	542.8	85.21	750.5	2625.45
4/27/2010	9:49:41	10.213	545.5	84.5	741.3	2554.05
4/27/2010	9:50:41	10.238	555.9	90.24	744.6	2470.75
4/27/2010	9:51:40	10.214	548.4	87.48	759.5	2490.85
4/27/2010	9:52:41	10.248	543.8	85.01	777	2563.45
4/27/2010	9:53:42	10.221	546.8	87.16	762.3	2473.05
4/27/2010	9:54:40	10.202	545.8	86.04	791.2	2555.35
4/27/2010	9:55:41	10.215	547.3	87.71	752	2520.75
4/27/2010	9:56:40	10.209	542.8	85.17	741.6	2519.85
4/27/2010	9:57:41	10.227	542.5	84.85	762.5	2565.65
4/27/2010	9:58:40	10.196	544.4	85.46	751.8	2507.95
4/27/2010	9:59:41	10.193	548.7	86.76	763.5	2510.15
4/27/2010	10:00:40	10.18	549.5	87.91	773.9	2482.95
4/27/2010	10:01:41	10.166	548.5	87.42	766	2456.65
4/27/2010	10:02:40	10.176	550.6	88.06	762.1	2541.95
4/27/2010	10:03:41	10.196	549.8	88.5	758.6	2488.15
4/27/2010	10:04:40	10.188	548.4	86.7	762	2466.85
4/27/2010	10:05:41	10.196	550.7	89.02	786.5	2555.55
Average of Test Run		O2-1	CO-1	NOx-1	THC-1	CH4-1
		%	ppm	ppm	ppm	ppm
4/27/2010	10:05:41	10.253	548.6	86.63	744.8	2462.007

Test Run 1 End

Final System Bias Check for Run 1 . STRATA Version 2.01

Operator:	RMC Environmental, Inc.	
Plant Name:	WMI-Westside	
Location:	Engine Outlet	
	Reference Cylinder Numbers	
	Zero	Span
O2-1	CC177437	CC22223
CO-1	CC22223	CC10518
NOx-1	CC22223	SG9150522
THC-1	CC22223	CC214403
CH4-1	CC22223	AAL19091

Date/Time	4/27/2010	10:11:55 PASSED			
Analyte	O2-1	CO-1	NOx-1	THC-1	CH4-1
Units	%	ppm	ppm	ppm	ppm
Zero Ref Cyl	0.00	0.00	0.00	0.00	0.00
Zero Cal	0.15	9.30	3.18	2.10	21.30
Zero Avg	0.36	7.40	8.14	11.30	12.50
Zero Bias%	1.00	0.20	2.00	0.90	0.20
Zero Drift%	-0.40	-0.10	0.90	0.20	-0.20
Span Ref Cyl	12.49	502.80	115.40	499.60	2510.00
Span Cal	12.66	501.80	115.16	500.50	2480.10
Span Avg	12.55	500.00	117.02	498.40	2508.60
Span Bias%	0.50	0.20	0.70	0.20	0.60
Span Drift%	-0.80	1.50	0.00	-0.70	0.70
Ini Zero Avg	0.45	8.80	6.01	9.30	22.50
Ini Span Avg	12.72	485.40	116.93	505.30	2475.10
Run Avg	10.25	548.60	86.63	744.80	2464.01
Co	0.40	8.10	7.07	10.30	17.50
Cm	12.64	492.70	116.98	501.90	2491.90
Correct Avg	10.06	560.80	83.54	746.50	2480.11

Test Run 2 Begin. STRATA Version 2.01
Operator: RMC Environmental, Inc.
Plant Name: WMI-Westside
Location: Engine Outlet

		O2-1	CO-1	NOx-1	THC-1	CH4-1
		%	ppm	ppm	ppm	ppm
Begin calculating run averages						
4/27/2010	10:16:04	10.2	543.7	85.12	703.6	2340.2
4/27/2010	10:17:03	10.222	545.2	86.29	700.5	2306.5
4/27/2010	10:18:04	10.171	548.1	86.56	699.7	2293.1
4/27/2010	10:19:03	10.188	552.4	89.92	713	2331.1
4/27/2010	10:20:03	10.15	553.7	91.23	690	2306.6
4/27/2010	10:21:04	10.16	551.3	90.38	701.1	2315.4
4/27/2010	10:22:03	10.172	546.7	88.1	716	2341.8
4/27/2010	10:23:03	10.143	547.2	88.2	716.3	2332.8
4/27/2010	10:24:04	10.184	550.8	89.64	717	2317.4
4/27/2010	10:25:03	10.191	553.1	92.32	721.5	2328.3
4/27/2010	10:26:03	10.178	547.9	89.15	705.2	2341.9
4/27/2010	10:27:04	10.166	543.6	87.02	712.1	2375.4
4/27/2010	10:28:03	10.179	542.6	85.6	732.5	2386.8
4/27/2010	10:29:03	10.178	541	84.9	740.1	2380.5
4/27/2010	10:30:04	10.163	542.8	85.57	749	2398
4/27/2010	10:31:03	10.161	548	88.72	718.5	2350.9
4/27/2010	10:32:02	10.161	547.9	88.88	723.9	2362.9
4/27/2010	10:33:04	10.176	544.9	87.43	753.5	2404.4
4/27/2010	10:34:03	10.136	545.8	86.96	735.1	2326.4
4/27/2010	10:35:04	10.162	551.7	90.95	759.8	2409.7
4/27/2010	10:36:04	10.141	551.1	90.8	750.7	2368
4/27/2010	10:37:03	10.179	547.6	89.65	792.3	2488.3
4/27/2010	10:38:03	10.172	540.6	85.41	766.4	2431.6
4/27/2010	10:39:04	10.141	546.9	88.72	757.2	2386.4
4/27/2010	10:40:03	10.149	550	90.41	747.9	2433.8
4/27/2010	10:41:04	10.139	547.8	89.1	742.6	2408.5
4/27/2010	10:42:03	10.139	546.8	88.61	753.4	2453.1
4/27/2010	10:43:04	10.138	545.2	87.1	752.7	2492.1
4/27/2010	10:44:03	10.148	548.3	89.68	755	2515.3
4/27/2010	10:45:03	10.154	544.4	87.5	752	2523.2
4/27/2010	10:46:04	10.173	542.7	87.43	768	2519.2
4/27/2010	10:47:03	10.172	547.2	90.24	780.3	2536.4
4/27/2010	10:48:02	10.175	543.6	88.85	764.1	2558.8
4/27/2010	10:49:04	10.166	540.8	87.05	743.3	2479.6
4/27/2010	10:50:03	10.193	541.6	87.35	778.3	2596.7
4/27/2010	10:51:04	10.196	534.3	83.33	797.9	2598.3
4/27/2010	10:52:03	10.17	533.7	82.21	780.6	2552.6
4/27/2010	10:53:04	10.154	539.3	84.67	781.4	2561.7
4/27/2010	10:54:03	10.141	542.3	85.84	770.4	2533.4
4/27/2010	10:55:02	10.139	542.8	86.25	773.3	2529.4

4/27/2010	10:56:03	10.143	543.3	86.98	765.5	2539.7
4/27/2010	10:57:04	10.111	548	88.82	744	2554.7
4/27/2010	10:58:03	10.139	547.4	89.35	781.7	2600.1
4/27/2010	10:59:03	10.154	541.9	87.46	768.8	2569.5
4/27/2010	11:00:04	10.15	544.5	88.06	769.3	2575.2
4/27/2010	11:01:03	10.142	545.4	88.91	769.8	2573.2
4/27/2010	11:02:02	10.124	544.6	88.36	779.4	2612.8
4/27/2010	11:03:04	10.127	544.9	88.19	770.1	2578
4/27/2010	11:04:03	10.158	545.6	89.4	787.3	2620.8
4/27/2010	11:05:02	10.157	545	89.47	799.9	2654
4/27/2010	11:06:04	10.174	543.7	88.67	768.2	2598.6
4/27/2010	11:07:03	10.135	541.9	86.93	745.3	2551.2
4/27/2010	11:08:04	10.13	545.6	89.29	775.5	2586.1
4/27/2010	11:09:03	10.101	544.7	89.06	781.3	2607.1
4/27/2010	11:10:02	10.073	545.1	88.91	773.8	2596.5
4/27/2010	11:11:04	10.095	547.8	89.91	769.1	2575.8
4/27/2010	11:12:03	10.132	545.5	90.29	780.9	2603.3
4/27/2010	11:13:04	10.157	545.4	90.21	796.1	2642.8
4/27/2010	11:14:03	10.158	545	88.76	793.6	2629.1
4/27/2010	11:15:02	10.103	539.7	85.74	762	2624.6
Average of Test Run		O2-1	CO-1	NOx-1	THC-1	CH4-1
		%	ppm	ppm	ppm	ppm
4/27/2010	11:15:03	10.155	545.3	88.1	753.3	2480.1

Test Run 2 End

Final System Bias Check for Run 2 . STRATA Version 2.01

Operator:	RMC Environmental, Inc.	
Plant Name:	WMI-Westside	
Location:	Engine Outlet	
	Reference Cylinder Numbers	
	Zero	Span
O2-1	CC177437	CC22223
CO-1	CC22223	CC10518
NOx-1	CC22223	SG9150522
THC-1	CC22223	CC214403
CH4-1	CC22223	AAL19091

Date/Time	4/27/2010	11:22:26 PASSED			
Analyte	O2-1	CO-1	NOx-1	THC-1	CH4-1
Units	%	ppm	ppm	ppm	ppm
Zero Ref Cyl	0.00	0.00	0.00	0.00	0.00
Zero Cal	0.15	9.30	3.18	2.10	21.30
Zero Avg	0.33	6.80	7.89	9.50	33.40
Zero Bias%	0.80	0.20	1.90	0.70	0.20
Zero Drift%	-0.10	-0.10	-0.10	-0.20	0.40
Span Ref Cyl	12.49	502.80	115.40	499.60	2510.00
Span Cal	12.66	501.80	115.16	500.50	2480.10
Span Avg	12.49	499.00	116.69	500.50	2531.20
Span Bias%	0.80	0.30	0.60	0.00	1.00
Span Drift%	-0.30	-0.10	-0.10	0.20	0.50
Ini Zero Avg	0.36	7.40	8.14	11.30	12.50
Ini Span Avg	12.55	500.00	117.02	498.40	2508.60
Run Avg	10.16	545.30	88.10	753.30	2480.10
Co	0.34	7.10	8.01	10.40	22.90
Cm	12.52	499.50	116.86	499.50	2519.90
Correct Avg	10.07	549.60	84.91	758.90	2470.00

Test Run 3 Begin. STRATA Version 2.01
Operator: RMC Environmental, Inc.
Plant Name: WMI-Westside
Location: Engine Outlet

		O2-1	CO-1	NOx-1	THC-1	CH4-1
		%	ppm	ppm	ppm	ppm
Begin calculating run averages						
4/27/2010	11:25:03	10.083	544.7	88.02	708.6	2516.5
4/27/2010	11:26:03	10.087	545.1	89.05	767.9	2547.4
4/27/2010	11:27:02	10.075	545.5	89.47	772.9	2495.9
4/27/2010	11:28:03	10.077	548.4	91.08	765.6	2533.7
4/27/2010	11:29:02	10.083	544.8	89.73	771.9	2654.1
4/27/2010	11:30:01	10.089	544.5	88.33	782.4	2684.2
4/27/2010	11:31:03	10.057	542.5	87.55	779.8	2639.8
4/27/2010	11:32:02	10.058	541.8	87.12	782	2645.8
4/27/2010	11:33:03	10.054	545	88.08	759.2	2653.8
4/27/2010	11:34:02	10.104	551.9	93.69	780.8	2662.3
4/27/2010	11:35:03	10.075	542.1	88.85	794.7	2676.8
4/27/2010	11:36:02	10.053	539.1	86.01	792.8	2654.9
4/27/2010	11:37:01	10.102	549.3	91.22	767	2652.5
4/27/2010	11:38:03	10.115	544.7	90.06	776	2600.6
4/27/2010	11:39:02	10.095	547.6	90.98	719.2	2389
4/27/2010	11:40:03	10.054	543.1	88.72	710	2371.8
4/27/2010	11:41:02	10.07	546.4	91.14	730.7	2440.8
4/27/2010	11:42:03	10.081	541.7	88.41	724.8	2409.7
4/27/2010	11:43:02	10.087	543.7	89.33	715	2381.3
4/27/2010	11:44:02	10.067	537.8	87.1	721.8	2402.4
4/27/2010	11:45:03	10.056	543.5	88.69	733.8	2419.1
4/27/2010	11:46:02	10.065	544.7	89.83	740.3	2454.3
4/27/2010	11:47:01	10.082	543	90.23	741.3	2444
4/27/2010	11:48:03	10.087	540.1	88.73	742.6	2427.3
4/27/2010	11:49:02	10.055	535.2	85.46	743	2431.1
4/27/2010	11:50:03	10.072	543.9	89.82	748.1	2466.7
4/27/2010	11:51:02	10.065	544.9	90.64	726	2403.3
4/27/2010	11:52:03	10.061	545.7	91.63	721.2	2436.7
4/27/2010	11:53:02	10.063	541.4	89.19	718.7	2419.6
4/27/2010	11:54:03	10.061	538.9	87.23	733.6	2441.5
4/27/2010	11:55:02	10.07	544	90.26	736.2	2436.9
4/27/2010	11:56:03	10.069	537.9	88.29	729.7	2397.9
4/27/2010	11:57:01	10.076	537.3	87.01	735.6	2426.2
4/27/2010	11:58:02	10.059	539	87.88	717.1	2368.6
4/27/2010	11:59:03	10.034	541	88.18	729	2380.7
4/27/2010	12:00:02	10.032	544.4	90.15	729.9	2372.6
4/27/2010	12:01:03	10.049	545	91.27	751.5	2426.5
4/27/2010	12:02:02	10.045	544.1	91.09	759.1	2432.7
4/27/2010	12:03:03	10.066	543.1	90.57	741.8	2438.5
4/27/2010	12:04:03	10.074	541	90.07	740.9	2447.6

4/27/2010	12:05:02	10.062	537.8	87.99	766.9	2461.8
4/27/2010	12:06:03	10.087	538.2	88.64	764.4	2426.4
4/27/2010	12:07:03	10.072	536.9	87.25	758.3	2401.4
4/27/2010	12:08:02	10.029	537.3	87.62	761.5	2405.5
4/27/2010	12:09:03	10.019	540.9	89.67	761.3	2423.7
4/27/2010	12:10:01	9.991	541	89.71	761.3	2437.4
4/27/2010	12:11:03	9.994	545.1	92.12	751.9	2442
4/27/2010	12:12:02	10.038	545.4	92.73	736.3	2380.3
4/27/2010	12:13:03	10.037	543	91.88	738.9	2368.7
4/27/2010	12:14:02	10.042	540.7	90.15	750.8	2400.4
4/27/2010	12:15:03	10.034	545.6	92.6	775.6	2426.7
4/27/2010	12:16:02	10.009	541.6	90.82	741.1	2380.3
4/27/2010	12:17:03	10.031	540.2	89.39	746.7	2350
4/27/2010	12:18:02	10.016	540.4	89.76	766.6	2397.2
4/27/2010	12:19:03	10.045	540.6	90.3	760.8	2372.3
4/27/2010	12:20:02	10.007	545.1	92.85	764.4	2379.1
4/27/2010	12:21:03	10.022	541.6	91.81	740.2	2349.4
4/27/2010	12:22:02	10.065	538.9	90.33	771.1	2404.4
4/27/2010	12:23:02	10.037	539.6	90.66	754.6	2330.2
4/27/2010	12:24:03	10.032	543.3	91.75	751.3	2333.3
Average of Test Run		O2-1	CO-1	NOx-1	THC-1	CH4-1
		%	ppm	ppm	ppm	ppm
4/27/2010	12:24:03	10.058	542.5	89.64	749.4	2455.8

Test Run 3 End

Final System Bias Check for Run 3 . STRATA Version 2.01

Operator:	RMC Environmental, Inc.	
Plant Name:	WMI-Westside	
Location:	Engine Outlet	
	Reference Cylinder Numbers	
	Zero	Span
O2-1	CC177437	CC22223
CO-1	CC22223	CC10518
NOx-1	CC22223	SG9150522
THC-1	CC22223	CC214403
CH4-1	CC22223	AAL19091

Date/Time	4/27/2010	12:29:07 PASSED			
Analyte	O2-1	CO-1	NOx-1	THC-1	CH4-1
Units	%	ppm	ppm	ppm	ppm
Zero Ref Cyl	0.00	0.00	0.00	0.00	0.00
Zero Cal	0.15	9.30	3.18	2.10	21.30
Zero Avg	0.15	5.80	8.51	1.40	34.10
Zero Bias%	0.00	0.30	2.10	0.10	0.30
Zero Drift%	-0.90	-0.10	0.20	-0.80	0.00
Span Ref Cyl	12.49	502.80	115.40	499.60	2510.00
Span Cal	12.66	501.80	115.16	500.50	2480.10
Span Avg	12.40	497.30	116.72	495.70	2469.50
Span Bias%	1.20	0.50	0.60	0.50	0.20
Span Drift%	-0.40	-0.20	0.00	-0.50	-1.20
Ini Zero Avg	0.33	6.80	7.89	9.50	33.40
Ini Span Avg	12.49	499.00	116.69	500.50	2531.20
Run Avg	10.06	542.50	89.64	749.40	2455.80
Co	0.24	6.30	8.20	5.50	33.70
Cm	12.44	498.20	116.70	498.10	2500.30
Correct Avg	10.05	548.20	86.62	754.60	2464.70

Test Run 4 Begin. STRATA Version 2.01
Operator: RMC Environmental, Inc.
Plant Name: WMI-Westside
Location: Engine Outlet

		O2-1	CO-1	NOx-1	THC-1	CH4-1
		%	ppm	ppm	ppm	ppm
Begin calculating run averages						
4/27/2010	12:36:03	9.982	528.7	91.45	752.7	2597.6
4/27/2010	12:37:02	9.984	530.2	92.89	757.4	2587.7
4/27/2010	12:38:03	9.967	528	91.29	752.9	2579.7
4/27/2010	12:39:02	9.948	532.4	93.43	742.5	2610.4
4/27/2010	12:40:03	9.937	529.2	92.44	740.7	2781.8
4/27/2010	12:41:02	9.942	525.4	90.16	738.9	2829.9
4/27/2010	12:42:03	9.947	527.3	90.97	748.1	2836.6
4/27/2010	12:43:02	9.944	527.1	91.95	741.3	2839.7
4/27/2010	12:44:03	9.952	530.1	93.31	749.1	2826.6
4/27/2010	12:45:02	9.954	528.3	92.68	756.8	2707.6
4/27/2010	12:46:02	9.957	526.7	91.89	752.3	2424.4
4/27/2010	12:47:03	9.956	527.5	91.62	762.5	2430.1
4/27/2010	12:48:02	9.924	531.1	94.1	748.2	2364.1
4/27/2010	12:49:03	9.947	529.6	93.28	719.3	2399
4/27/2010	12:50:02	9.96	529.4	93.06	695.9	2404.5
4/27/2010	12:51:03	9.961	528	92.73	703.8	2427.7
4/27/2010	12:52:02	9.981	521.9	88.97	705.1	2420.5
4/27/2010	12:53:03	9.984	516.3	86.08	712	2461.3
4/27/2010	12:54:02	9.96	517.2	86.4	699.6	2441.3
4/27/2010	12:55:03	9.956	518.9	87.21	705.4	2444.7
Begin Traverse						
4/27/2010	12:56:02	9.97	524.3	90.55	705.4	2464.8
4/27/2010	12:57:03	9.978	516.7	87.29	692.6	2489.3
4/27/2010	12:58:02	9.971	514.3	84.74	694.7	2507.9
4/27/2010	12:59:02	9.963	512.5	83.64	717.4	2500.6
4/27/2010	13:00:02	9.949	518.6	86.96	735.9	2436.6
4/27/2010	13:01:03	9.962	518.5	87.57	764.3	2512.9
4/27/2010	13:02:02	9.949	517.9	86.51	749.7	2435.9
4/27/2010	13:03:03	9.97	519.4	88.17	776.4	2499.9
4/27/2010	13:04:02	9.958	511.4	83.76	762	2464.9
4/27/2010	13:05:02	9.911	517.9	85.57	761.4	2473.4
4/27/2010	13:06:03	9.946	519.8	86.7	765	2493
4/27/2010	13:07:02	9.924	519.2	87.79	766.6	2483.6
4/27/2010	13:08:03	9.932	516.4	86.38	774	2512.2
4/27/2010	13:09:02	9.964	520.3	88.12	777.5	2498.2
4/27/2010	13:10:02	9.967	516.3	87.49	769.7	2481.9
4/27/2010	13:11:03	9.904	510.7	83.67	748.5	2461.1
4/27/2010	13:12:02	9.887	521.1	88.29	745.7	2462.3
4/27/2010	13:13:03	9.912	521.3	88.61	777.6	2484.3
4/27/2010	13:14:02	9.94	516.7	86.98	786.5	2510.7

4/27/2010	13:15:03	9.922	515.8	86.63	793	2507.7
Begin Traverse						
4/27/2010	13:16:02	9.916	519.2	87.84	798	2530.5
4/27/2010	13:17:03	9.914	518.8	88.84	807.2	2556
4/27/2010	13:18:03	9.926	517.1	86.75	792.4	2510.9
4/27/2010	13:19:02	9.904	516.8	87.9	788.3	2511.5
4/27/2010	13:20:03	9.888	517	87.59	784.7	2486.2
4/27/2010	13:21:02	9.897	516.1	86.76	781.9	2470.9
4/27/2010	13:22:03	9.877	516	86.97	799.9	2508
4/27/2010	13:23:02	9.903	511.9	85.88	792.4	2537.9
4/27/2010	13:24:02	9.885	512.2	85.4	780.9	2524.5
4/27/2010	13:25:03	9.83	518.5	88.52	781.2	2541.8
4/27/2010	13:26:02	9.843	517.8	87.71	773.4	2491.2
4/27/2010	13:27:03	9.827	518.1	87.89	773	2539.5
4/27/2010	13:28:02	9.89	516.6	88.04	792.3	2546.8
4/27/2010	13:29:03	9.834	511.5	84.25	800.1	2524.9
4/27/2010	13:30:03	9.852	515.1	86.69	799.7	2525.4
4/27/2010	13:31:02	9.856	512.9	86.28	804.2	2517.4
4/27/2010	13:32:03	9.839	513.3	86.49	801.6	2499.5
4/27/2010	13:33:03	9.846	517.3	87.4	788.8	2515.7
4/27/2010	13:34:02	9.842	519.6	88.73	796.5	2503.1
4/27/2010	13:35:03	9.822	511.5	84.97	794.4	2558.2
Average of Test Run		O2-1	CO-1	NOx-1	THC-1	CH4-1
		%	ppm	ppm	ppm	ppm
4/27/2010	13:35:03	9.923	520	88.36	759.7	2525
Test Run 4 End						

Final System Bias Check for Run 4 . STRATA Version 2.01

Operator:	RMC Environmental, Inc.	
Plant Name:	WMI-Westside	
Location:	Engine Outlet	
	Reference Cylinder Numbers	
	Zero	Span
O2-1	CC177437	CC22223
CO-1	CC22223	CC10518
NOx-1	CC22223	SG9150522
THC-1	CC22223	CC214403
CH4-1	CC22223	AAL19091

Date/Time	4/27/2010	13:42:37 PASSED			
Analyte	O2-1	CO-1	NOx-1	THC-1	CH4-1
Units	%	ppm	ppm	ppm	ppm
Zero Ref Cyl	0.00	0.00	0.00	0.00	0.00
Zero Cal	0.15	9.30	3.18	2.10	21.30
Zero Avg	0.10	5.00	11.70	15.20	11.60
Zero Bias%	0.20	0.40	3.40	1.30	0.20
Zero Drift%	-0.20	-0.10	1.30	1.40	-0.40
Span Ref Cyl	12.49	502.80	115.40	499.60	2510.00
Span Cal	12.66	501.80	115.16	500.50	2480.10
Span Avg	12.26	494.20	115.76	516.60	2446.10
Span Bias%	1.90	0.80	0.20	1.60	0.70
Span Drift%	-0.60	-0.30	-0.40	2.10	-0.50
Ini Zero Avg	0.15	5.80	8.51	1.40	34.10
Ini Span Avg	12.40	497.30	116.72	495.70	2469.50
Run Avg	9.92	520.00	88.36	759.70	2525.00
Co	0.12	5.40	10.10	8.30	22.90
Cm	12.33	495.80	116.24	506.10	2457.80
Correct Avg	10.03	527.60	85.09	754.10	2467.60

Test Run 5 Begin. STRATA Version 2.01
Operator: RMC Environmental, Inc.
Plant Name: WMI-Westside
Location: Engine Outlet

		O2-1	CO-1	NOx-1	THC-1	CH4-1
		%	ppm	ppm	ppm	ppm
Begin calculating run averages						
4/27/2010	13:45:01	9.807	515.8	87.57	742.3	2568.4
4/27/2010	13:46:02	9.798	515.1	86.37	756.2	2610.3
4/27/2010	13:47:01	9.812	515.9	87.14	741.1	2577.8
4/27/2010	13:48:02	9.823	515	87.56	722.7	2586.2
4/27/2010	13:49:01	9.819	515.1	87.46	739.7	2562.4
4/27/2010	13:50:02	9.81	514	86.57	750.8	2558
4/27/2010	13:51:01	9.829	513.8	87.05	763.4	2578.1
4/27/2010	13:52:01	9.821	514.2	87.11	753.4	2545.9
4/27/2010	13:53:02	9.828	515.4	88.28	759.8	2570.8
4/27/2010	13:54:01	9.823	515	87.87	756.7	2563
4/27/2010	13:55:01	9.804	521	91.65	751	2542.1
4/27/2010	13:56:02	9.814	519.6	90.76	760.6	2561.6
4/27/2010	13:57:01	9.813	516.1	87.72	756.7	2546
4/27/2010	13:58:02	9.819	515.9	88.65	755	2554.9
4/27/2010	13:59:02	9.839	513.5	86.79	765.1	2592.9
4/27/2010	14:00:01	9.817	517	88.58	774.7	2683.9
4/27/2010	14:01:02	9.8	515.5	88.11	764.7	2613.2
4/27/2010	14:02:03	9.806	516	87.81	739.9	2656.2
4/27/2010	14:03:01	9.801	516.8	88.93	740.8	2619.1
4/27/2010	14:04:02	9.774	518.1	90.08	759.9	2566.9
4/27/2010	14:05:01	9.778	513.7	87.52	762.6	2556.7
4/27/2010	14:06:02	9.814	511	86.54	758.5	2593.7
4/27/2010	14:07:02	9.773	512.8	86.01	730.1	2542.8
4/27/2010	14:08:01	9.801	516.5	87.58	733	2531.5
4/27/2010	14:09:02	9.764	513.7	86.95	739.5	2558.4
4/27/2010	14:10:02	9.788	514.1	86.51	735.5	2542.9
4/27/2010	14:11:01	9.785	516.8	88.28	743.7	2553.2
4/27/2010	14:12:02	9.817	514.3	87.65	750.7	2596.7
4/27/2010	14:13:01	9.808	519.1	89.89	745.5	2575.4
4/27/2010	14:14:02	9.823	517.3	90.42	762.4	2602
4/27/2010	14:15:01	9.806	514.2	88.42	753.7	2585
4/27/2010	14:16:03	9.815	509.2	84.81	739.7	2555.6
4/27/2010	14:17:01	9.777	518.2	88.61	744.2	2541
4/27/2010	14:18:02	9.826	517.2	89.58	722.5	2535.9
4/27/2010	14:19:01	9.807	510.6	85.7	724	2544.5
4/27/2010	14:20:03	9.806	514.7	87.7	716.7	2535.5
4/27/2010	14:21:01	9.803	514.1	87.96	721.7	2525
4/27/2010	14:22:02	9.801	513.7	87.51	744.5	2555.2
4/27/2010	14:23:01	9.767	513.6	88.5	753.9	2570.9
4/27/2010	14:24:02	9.804	512.2	86.43	735.2	2550.9

4/27/2010	14:25:01	9.79	515.9	88.91	725	2527.7
4/27/2010	14:26:02	9.746	513.2	87.21	741.5	2549.4
4/27/2010	14:27:01	9.734	517	88.7	747.7	2532.5
4/27/2010	14:28:02	9.77	516.7	90.17	750.3	2529.9
4/27/2010	14:29:01	9.717	515	88.06	729.4	2516.7
4/27/2010	14:30:02	9.772	516.7	88.86	737.9	2598.8
4/27/2010	14:31:01	9.744	519.1	90.59	746.4	2570.4
4/27/2010	14:32:02	9.803	516.6	90	754.4	2581.4
4/27/2010	14:33:03	9.801	514.4	88.64	744.4	2560.6
4/27/2010	14:34:01	9.805	515.3	88.58	752.2	2554.5
4/27/2010	14:35:02	9.712	510.4	85.88	744.9	2524.2
4/27/2010	14:36:03	9.746	515.7	88.46	749.6	2535.9
4/27/2010	14:37:01	9.76	513.5	88.44	743.8	2522.3
4/27/2010	14:38:02	9.801	510.3	86.9	756.4	2550.2
4/27/2010	14:39:01	9.723	511.4	86.59	728	2506
4/27/2010	14:40:02	9.726	516	89.87	738.5	2540.4
4/27/2010	14:41:01	9.725	512	87.16	743.5	2541.1
4/27/2010	14:42:02	9.731	514.7	88.26	747.8	2533.1
4/27/2010	14:43:01	9.723	513	88.55	747.6	2531.5
4/27/2010	14:44:02	9.718	510.5	86.98	744.7	2529.4

Average of Test Run		O2-1	CO-1	NOx-1	THC-1	CH4-1
		%	ppm	ppm	ppm	ppm
4/27/2010	14:44:02	9.788	514.9	88.02	745.8	2560.9

Test Run 5 End

Final System Bias Check for Run 5 . STRATA Version 2.01

Operator:	RMC Environmental, Inc.	
Plant Name:	WMI-Westside	
Location:	Engine Outlet	
	Reference Cylinder Numbers	
	Zero	Span
O2-1	CC177437	CC22223
CO-1	CC22223	CC10518
NOx-1	CC22223	SG9150522
THC-1	CC22223	CC214403
CH4-1	CC22223	AAL19091

Date/Time	4/27/2010	14:52:48 PASSED			
Analyte	O2-1	CO-1	NOx-1	THC-1	CH4-1
Units	%	ppm	ppm	ppm	ppm
Zero Ref Cyl	0.00	0.00	0.00	0.00	0.00
Zero Cal	0.15	9.30	3.18	2.10	21.30
Zero Avg	-0.09	4.30	12.34	8.10	24.20
Zero Bias%	1.10	0.50	3.70	0.60	0.10
Zero Drift%	-0.90	-0.10	0.30	-0.70	0.30
Span Ref Cyl	12.49	502.80	115.40	499.60	2510.00
Span Cal	12.66	501.80	115.16	500.50	2480.10
Span Avg	12.19	492.60	116.00	500.60	2481.10
Span Bias%	2.20	0.90	0.30	0.00	0.00
Span Drift%	-0.30	-0.20	0.10	-1.60	0.70
Ini Zero Avg	0.10	5.00	11.70	15.20	11.60
Ini Span Avg	12.26	494.20	115.76	516.60	2446.10
Run Avg	9.79	514.90	88.02	745.80	2460.90
Co	0.01	4.70	12.02	11.60	17.90
Cm	12.23	493.40	115.88	508.60	2463.60
Correct Avg	10.00	524.90	84.45	738.20	2507.20

Test Run 6 Begin. STRATA Version 2.01
Operator: RMC Environmental, Inc.
Plant Name: WMI-Westside
Location: Engine Outlet

Begin calculating run averages

		O2-1 %	CO-1 ppm	NOx-1 ppm	THC-1 ppm	CH4-1 ppm
4/27/2010	14:55:00	9.723	509.6	86.56	762.5	2537.8
4/27/2010	14:56:01	9.693	511.5	86.66	768.8	2557.5
4/27/2010	14:57:00	9.719	511.2	86.34	767.5	2543.4
4/27/2010	14:58:01	9.723	512.8	86.9	764.6	2547.5
4/27/2010	14:59:01	9.727	517.8	89.47	765	2586.2
4/27/2010	15:00:00	9.756	518.2	89.76	762.5	2549.1
4/27/2010	15:01:01	9.761	516.7	88.83	737.2	2519.4
4/27/2010	15:02:01	9.789	518.5	90.18	741.9	2519.6
4/27/2010	15:03:00	9.772	517.3	89.85	763.7	2537.3
4/27/2010	15:04:01	9.816	519.3	90.25	770.3	2525.6
4/27/2010	15:05:00	9.863	515.4	89.08	751.3	2510.6
4/27/2010	15:06:01	9.821	515.8	88.67	767.8	2547.2
4/27/2010	15:07:01	9.862	514.6	87.23	758.6	2508.1
4/27/2010	15:08:00	9.87	518.3	89.77	765.2	2515
4/27/2010	15:09:01	9.872	513.4	87.07	761.8	2503.6
4/27/2010	15:10:00	9.87	513.4	86.31	768.3	2531.9
4/27/2010	15:11:02	9.918	513.5	86.62	779	2551
4/27/2010	15:12:01	9.904	512.2	85.76	775.4	2531.7
4/27/2010	15:13:00	9.875	510.6	84.2	771.9	2520.2
4/27/2010	15:14:01	9.882	516	86.42	775.4	2552
4/27/2010	15:15:00	9.933	515.9	87.8	756.1	2530
4/27/2010	15:16:01	9.933	517.6	88.5	753.4	2490.2
4/27/2010	15:17:00	9.947	518.2	88.51	754.7	2516.6
4/27/2010	15:18:01	9.941	514.9	86.66	753.9	2504.6
4/27/2010	15:19:00	9.953	516.2	86.6	766.4	2489.2
4/27/2010	15:20:02	9.968	516	86.96	757.7	2489.6
4/27/2010	15:21:01	9.947	515.5	85.84	775	2505
4/27/2010	15:22:00	9.947	520.5	88.48	758	2503.9
4/27/2010	15:23:01	9.954	520.2	89.1	765.2	2588.4
4/27/2010	15:24:00	9.94	515.4	86.59	769.5	2602.6
4/27/2010	15:25:01	9.942	518.5	87.7	751.5	2509.1
4/27/2010	15:26:00	9.916	520.6	88.11	767.5	2532.8
4/27/2010	15:27:01	9.962	519.7	88.48	771.9	2547.9
4/27/2010	15:28:00	9.976	515.5	87.77	781.1	2579.2
4/27/2010	15:29:01	9.933	514.6	85.76	763.8	2530.2
4/27/2010	15:30:00	9.952	516.7	86	756.6	2528.7
4/27/2010	15:31:01	9.969	518.6	87.28	764.7	2546.3
4/27/2010	15:32:00	9.961	518.9	87.35	756	2514.3
4/27/2010	15:33:01	9.98	520.1	89.26	763.2	2528.1
4/27/2010	15:34:00	9.981	513.4	85.63	766.5	2496

4/27/2010	15:35:01	9.969	516.7	86.95	767.5	2518.8
4/27/2010	15:36:02	9.951	519.2	87.7	773.9	2536.6
4/27/2010	15:37:00	9.979	519.9	87.92	766.7	2530.9
4/27/2010	15:38:01	9.981	516.9	87.07	742.4	2501.7
4/27/2010	15:39:01	9.989	518.4	86.87	767	2540.2
4/27/2010	15:40:00	9.976	521.2	89.11	762.3	2538.9
4/27/2010	15:41:01	9.982	514.2	85.45	759.9	2517.5
4/27/2010	15:42:00	9.969	519.9	87.22	753	2474.5
4/27/2010	15:43:01	9.989	521.9	88.28	766.9	2509.8
4/27/2010	15:44:00	9.994	516.2	85.96	771.2	2546.4
4/27/2010	15:45:00	9.983	512.1	83.68	771.8	2532.4
4/27/2010	15:46:01	9.986	516.2	85.46	760	2514.1
4/27/2010	15:47:00	9.991	516	84.67	765.6	2528.6
4/27/2010	15:48:01	10.003	510.5	82.52	769.6	2571.4
4/27/2010	15:49:00	9.973	510.3	82.03	775.4	2559.7
4/27/2010	15:50:01	9.965	516.4	84.64	763.3	2593.6
4/27/2010	15:51:00	9.976	519.1	86.97	774.4	2618.4
4/27/2010	15:52:01	9.961	522.4	88.29	772.4	2601.8
4/27/2010	15:53:00	9.975	523.7	89.05	772.8	2604.7
4/27/2010	15:54:01	9.965	517.1	85.34	753.2	2525.3
Average of Test Run		O2-1	CO-1	NOx-1	THC-1	CH4-1
		%	ppm	ppm	ppm	ppm
4/27/2010	15:54:01	9.913	516.5	87.16	764	2534.9

Test Run 6 End

Final System Bias Check for Run 6 . STRATA Version 2.01

Operator:	RMC Environmental, Inc.	
Plant Name:	WMI-Westside	
Location:	Engine Outlet	
	Reference Cylinder Numbers	
	Zero	Span
O2-1	CC177437	CC22223
CO-1	CC22223	CC10518
NOx-1	CC22223	SG9150522
THC-1	CC22223	CC214403
CH4-1	CC22223	AAL19091

Date/Time	4/27/2010	16:01:49 PASSED			
Analyte	O2-1	CO-1	NOx-1	THC-1	CH4-1
Units	%	ppm	ppm	ppm	ppm
Zero Ref Cyl	0.00	0.00	0.00	0.00	0.00
Zero Cal	0.15	9.30	3.18	2.10	21.30
Zero Avg	0.21	6.20	9.61	10.10	25.10
Zero Bias%	0.30	0.30	2.60	0.80	0.10
Zero Drift%	1.40	0.20	-1.10	0.20	0.00
Span Ref Cyl	12.49	502.80	115.40	499.60	2510.00
Span Cal	12.66	501.80	115.16	500.50	2480.10
Span Avg	12.41	497.20	115.45	506.30	2492.70
Span Bias%	1.20	0.50	0.10	0.60	0.30
Span Drift%	1.10	0.50	-0.20	0.60	0.20
Ini Zero Avg	-0.09	4.30	12.34	8.10	24.20
Ini Span Avg	12.19	492.60	116.00	500.60	2481.10
Run Avg	9.91	516.50	87.16	764.00	2534.90
Co	0.06	5.20	10.98	9.10	24.70
Cm	12.30	494.90	115.73	503.50	2486.90
Correct Avg	10.05	525.00	83.93	762.50	2558.90

METHOD 4 RUN SUMMARY SHEET

Company: Waste Management of Texas **Load:** > 90%
Source: Westside Landfill - 3520 Cat Engines
Test Location: Engine #3

Run:	**M4-R1**	**M4-R2**	**M4-R3**
Flow Runs:	1	2	3
Start Time:	4/28/2010 8:32	4/28/2010 9:40	4/28/2010 10:55
End Time:	4/28/2010 9:32	4/28/2010 10:40	4/28/2010 11:55

RUN DATA

Meter voume start (cu. ft.):	102.000	125.000	148.500
Meter volume finish (cu. ft.):	124.835	148.407	171.536
Meter calib. factor (Y):	1.0006	1.0006	1.0006
Barometric pressure (in. Hg):	29.82	29.82	29.82
Average Delta-H (in. H2O):	1.73	1.73	1.73
Gas meter temperature (deg F):	79.0	83.0	89.0
Sil-Gel total wt. H2O collected (grams):	5.3	4.7	4.3
Impinger total volume H2O collected (ml):	49	51	52

CALCULATED RESULTS

Gas volume sampled (DSCF)*:	22.403	22.785	22.179
Water vapor volume (SCF)*:	2.556	2.622	2.650
Moisture content (% volume):	**10.2**	**10.3**	**10.7**

* 68 deg F (20 deg C) - 29.92 in. Hg

VOLUMETRIC FLOW RATE DETERMINATION

Company: Waste Management of Texas
Source: Westside Landfill - 3520 Cat Engines
Test Location: Engine #3

Conducted By: GC/RC

Load: > 90%
Run: 1
Start Time: 4/28/2010 8:32
End Time: 4/28/2010 9:32

TEST DATA

Test Point	Delta P (in H2O)	Temp. (Deg F)	Test Point	Delta P (in H2O)	Temp. (Deg F)
A-1	3.100	943	B-5	3.500	938
A-2	3.300	943	B-6	3.400	938
A-3	3.400	943	B-7	3.200	938
A-4	3.500	943	B-8	2.800	938
A-5	3.500	943			
A-6	3.200	943			
A-7	3.000	943			
A-8	2.900	943			
B-1	2.800	938			
B-2	3.200	938			
B-3	3.300	938			
B-4	3.600	938			

Duct Area:	188.7	(A)	sq. inches
Barometric Pressure:	29.82	(Pbar)	inches Hg
Static Pressure:	-5.00	(PG)	inches H2O
Pitot Tube Coefficient:	0.84	(Cp)	
Percent O2:	10.0	% O2	
Percent CO2:	12.5	% CO2	
Percent Nitrogen:	77.5	% N2	
Percent Moisture:	10.2	$\%H_20$	
Average Delta P:	3.23		inches H2O
Root Mean Sq. Delta P:	3.23	(Pavg)	inches H2O
Mean Temperature:	940.5	(Ts)	Degrees F
Number Of Traverse Points:	16		

CALCULATIONS

DRY MOLE FRACTION OF STACK GAS: $Mfd = 1 - (\%H_2O / 100)$	Mfd =	0.898	
ABSOLUTE STACK GAS PRESSURE: Ps = Pbar + (Pg / 13.6)	Ps =	29.45	in. Hg
DRY MOLECULAR WEIGHT OF STACK GAS: $Md = 0.44 (\%CO_2) + 0.32 (\%O_2) + 0.28 (\%N_2)$	Md =	30.40	lb/lb-mole
WET MOLECULAR WEIGHT OF STACK GAS: $Ms = (Md)(Mfd) + 0.18 (\%H_2O)$	Ms =	29.13	lb/lb-mole
AVERAGE STACK GAS VELOCITY: $Vs = 85.49(Cp) X \{(Pavg)(Ts + 460)/[(Ps)(Ms)]\}^{\wedge 0.5}$	Vs =	164.8	ft/sec
DRY VOLUMETRIC FLOW RATE: Qsd = 7.353(60)(Mfd)(Vs)(A)(Ps) / (Ts + 460)	Qsd =	4,316	DSCFM (DRY)
WET VOLUMETRIC FLOW RATE: Qsw = Qsd / Mfd	Qaw =	4,808.6	SCFM (WET)

VOLUMETRIC FLOW RATE DETERMINATION

Company: Waste Management of Texas
Source: Westside Landfill - 3520 Cat Engines
Test Location: Engine #3

Conducted By: GC/RC

Load: > 90%
Run: 2
Start Time: 4/28/2010 9:40
End Time: 4/28/2010 10:40

TEST DATA

Test Point	Delta P (in H2O)	Temp. (Deg F)	Test Point	Delta P (in H2O)	Temp. (Deg F)
A-1	2.800	936	B-5	3.600	934
A-2	3.300	936	B-6	3.500	934
A-3	3.500	936	B-7	3.200	934
A-4	3.600	936	B-8	2.400	934
A-5	3.400	936			
A-6	3.200	936			
A-7	3.000	936			
A-8	2.700	936			
B-1	2.900	934			
B-2	3.300	934			
B-3	3.200	934			
B-4	3.400	934			

Duct Area:	188.7	(A)	sq. inches
Barometric Pressure:	29.82	(Pbar)	inches Hg
Static Pressure:	-5.00	(PG)	inches H2O
Pitot Tube Coefficient:	0.84	(Cp)	
Percent O2:	10.0	% O2	
Percent CO2:	12.5	% CO2	
Percent Nitrogen:	77.5	% N2	
Percent Moisture:	10.3	$\%H_20$	
Average Delta P:	3.19		inches H2O
Root Mean Sq. Delta P:	3.18	(Pavg)	inches H2O
Mean Temperature:	935.0	(Ts)	Degrees F
Number Of Traverse Points:	16		

CALCULATIONS

DRY MOLE FRACTION OF STACK GAS: $Mfd = 1 - (\%H_2O / 100)$	Mfd =	0.897	
ABSOLUTE STACK GAS PRESSURE: $Ps = Pbar + (Pg / 13.6)$	Ps =	29.45	in. Hg
DRY MOLECULAR WEIGHT OF STACK GAS: $Md = 0.44 (\%CO_2) + 0.32 (\%O_2) + 0.28 (\%N_2)$	Md =	30.40	lb/lb-mole
WET MOLECULAR WEIGHT OF STACK GAS: $Ms = (Md)(Mfd) + 0.18 (\%H_2O)$	Ms =	29.12	lb/lb-mole
AVERAGE STACK GAS VELOCITY: $Vs = 85.49(Cp) X \{(Pavg)(Ts + 460)/[(Ps)(Ms)]\}^{0.5}$	Vs =	163.3	ft/sec
DRY VOLUMETRIC FLOW RATE: $Qsd = 7.353(60)(Mfd)(Vs)(A)(Ps) / (Ts + 460)$	Qsd =	4,289	DSCFM (DRY)
WET VOLUMETRIC FLOW RATE: $Qsw = Qsd / Mfd$	Qaw =	4,782.8	SCFM (WET)

VOLUMETRIC FLOW RATE DETERMINATION

Company: Waste Management of Texas
Source: Westside Landfill - 3520 Cat Engines
Test Location: Engine #3

Conducted By: GC/RC

Load: > 90%
Run: 3
Start Time: 4/28/2010 10:55
End Time: 4/28/2010 11:55

TEST DATA

Test Point	Delta P (in H2O)	Temp. (Deg F)	Test Point	Delta P (in H2O)	Temp. (Deg F)
A-1	2.800	931	B-5	3.800	934
A-2	3.100	931	B-6	3.300	934
A-3	3.300	931	B-7	3.000	934
A-4	3.600	931	B-8	2.900	934
A-5	3.400	931			
A-6	3.200	931			
A-7	3.000	931			
A-8	2.800	931			
B-1	2.900	934			
B-2	3.300	934			
B-3	3.400	934			
B-4	3.700	934			

Duct Area:	188.7	(A)	sq. inches
Barometric Pressure:	29.82	(Pbar)	inches Hg
Static Pressure:	-5.10	(PG)	inches H2O
Pitot Tube Coefficient:	0.84	(Cp)	
Percent O2:	10.0	% O2	
Percent CO2:	13.2	% CO2	
Percent Nitrogen:	76.8	% N2	
Percent Moisture:	10.7	$\%H_2O$	
Average Delta P:	3.22		inches H2O
Root Mean Sq. Delta P:	3.21	(Pavg)	inches H2O
Mean Temperature:	932.5	(Ts)	Degrees F
Number Of Traverse Points:	16		

CALCULATIONS

DRY MOLE FRACTION OF STACK GAS: $Mfd = 1 - (\%H_2O / 100)$	Mfd =	0.893	
ABSOLUTE STACK GAS PRESSURE: $Ps = Pbar + (Pg / 13.6)$	Ps =	29.45	in. Hg
DRY MOLECULAR WEIGHT OF STACK GAS: $Md = 0.44 (\%CO_2) + 0.32 (\%O_2) + 0.28 (\%N_2)$	Md =	30.51	lb/lb-mole
WET MOLECULAR WEIGHT OF STACK GAS: $Ms = (Md)(Mfd) + 0.18 (\%H_2O)$	Ms =	29.18	lb/lb-mole
AVERAGE STACK GAS VELOCITY: $Vs = 85.49(Cp) X \{(Pavg)(Ts + 460)/[(Ps)(Ms)]\}^{0.5}$	Vs =	163.8	ft/sec
DRY VOLUMETRIC FLOW RATE: $Qsd = 7.353(60)(Mfd)(Vs)(A)(Ps) / (Ts + 460)$	Qsd =	4,294	DSCFM (DRY)
WET VOLUMETRIC FLOW RATE: $Qsw = Qsd / Mfd$	Qaw =	4,807.0	SCFM (WET)

Calibration Error Test at Run 7 . STRATA Version 2.01

Operator:	RMC Environmental, Inc.			
Plant Name:	WMI-Westside			
Location:	Engine Outlet			
	Reference Cylinder Numbers			
	Zero	Low-range	Mid-range	High-range
O2-1	CC177437		CC22223	CC147760
CO-1	CC22223	CC10309	CC10518	SG9198829
NOx-1	CC22223	CC131936	SG9150522	CC177437
THC-1	CC22223	SG9102081	CC214403	CC21153
CH4-1	CC22223	CC161935	AAL19091	ALM059469

Date/Time	4/28/2010	8:22:16 PASSED			
Analyte	O2-1	CO-1	NOx-1	THC-1	CH4-1
Units	%	ppm	ppm	ppm	ppm
Zero Ref Cyl	0.00	0.00	0.00	0.00	0.00
Zero Avg	0.17	9.00	4.08	-2.20	18.70
Zero Error%	0.80	0.90	1.60	0.20	0.40
Low Ref Cyl		255.80	50.98	300.00	1500.00
Low Avg		255.40	52.59	302.80	1572.50
Low Error%		0.00	0.60	0.30	1.40
Mid Ref Cyl	12.49	502.80	115.40	499.60	2510.00
Mid Avg	12.43	496.20	116.83	498.10	2528.00
Mid Error%	0.30	0.70	0.60	0.10	0.40
High Ref Cyl	20.85	1004.00	256.90	842.90	4540.00
High Avg	20.52	998.60	258.92	841.90	4538.90
High Error%	1.60	0.50	0.80	0.10	0.00

Initial System Bias Check for Run 7 . STRATA Version 2.01

Operator:	RMC Environmental, Inc.	
Plant Name:	WMI-Westside	
Location:	Engine Outlet	
	Reference Cylinder Numbers	
	Zero	Span
O2-1	CC177437	CC22223
CO-1	CC22223	CC10518
NOx-1	CC22223	SG9150522
THC-1	CC22223	CC214403
CH4-1	CC22223	AAL19091

Date/Time	4/28/2010	8:30:32 PASSED			
Analyte	O2-1	CO-1	NOx-1	THC-1	CH4-1
Units	%	ppm	ppm	ppm	ppm
Zero Ref Cyl	0.00	0.00	0.00	0.00	0.00
Zero Cal	0.17	9.00	4.08	-2.20	18.70
Zero Avg	0.33	5.80	9.74	1.80	12.30
Zero Bias%	0.80	0.30	2.30	0.40	0.10
Zero Drift%					
Span Ref Cyl	12.49	502.80	115.40	499.60	2510.00
Span Cal	12.43	496.20	116.83	498.10	2528.00
Span Avg	12.74	496.70	117.33	509.80	2478.90
Span Bias%	1.50	0.00	0.20	1.20	1.00
Span Drift%					

Test Run 7 Begin. STRATA Version 2.01
Operator: RMC Environmental, Inc.
Plant Name: WMI-Westside
Location: Engine Outlet

		O2-1	CO-1	NOx-1	THC-1	CH4-1
		%	ppm	ppm	ppm	ppm
Begin calculating run averages						
4/28/2010	8:33:18	10.286	544.1	83.65	588.9	1963
4/28/2010	8:34:19	10.279	543.7	83.48	598.1	1958.9
4/28/2010	8:35:17	10.303	550.2	85.04	607.7	1941.7
4/28/2010	8:36:18	10.313	547.2	85.14	611.4	1960.5
4/28/2010	8:37:19	10.299	544.7	83.96	623.3	1957.2
4/28/2010	8:38:17	10.291	548.4	84.94	635	1968.6
4/28/2010	8:39:18	10.291	549	85.85	635	1992.1
4/28/2010	8:40:17	10.301	546.1	84.39	643.7	1984
4/28/2010	8:41:18	10.32	548.4	86.04	633.4	1996
4/28/2010	8:42:18	10.291	549	85.35	642.1	2185.2
4/28/2010	8:43:17	10.306	549.2	86.62	655.5	2211.9
4/28/2010	8:44:18	10.303	545.8	83.82	667.9	2217.3
4/28/2010	8:45:19	10.322	546.7	84.83	681.6	2239.3
4/28/2010	8:46:17	10.384	543.9	83.88	676.8	2232.1
4/28/2010	8:47:18	10.356	539.8	82.97	678.5	2264.8
4/28/2010	8:48:17	10.368	542.3	83.04	679.7	2236.2
4/28/2010	8:49:18	10.365	546.1	85.02	687.1	2231.9
4/28/2010	8:50:19	10.384	545.4	84.87	693.8	2250.7
4/28/2010	8:51:17	10.39	542.2	83.83	693.5	2229.6
4/28/2010	8:52:18	10.349	546	84.34	701.4	2240.5
Begin Traverse						
4/28/2010	8:53:17	10.347	545.9	84.95	708.1	2269.2
4/28/2010	8:54:18	10.4	543.2	83.72	693.7	2290.5
4/28/2010	8:55:19	10.337	543.2	83.96	718.7	2293.8
4/28/2010	8:56:18	10.317	546.8	85.05	723.5	2294.3
4/28/2010	8:57:18	10.331	544.1	83.49	744.9	2358.5
4/28/2010	8:58:17	10.32	545	83.72	738.5	2328.2
4/28/2010	8:59:18	10.33	548.8	86.06	733.8	2334.4
4/28/2010	9:00:17	10.342	542.4	84.3	747.7	2364.7
4/28/2010	9:01:18	10.333	543.9	83.86	754.4	2367.3
4/28/2010	9:02:19	10.34	545.7	84.59	744.5	2335
4/28/2010	9:03:18	10.325	548.2	87.46	745.1	2344.3
4/28/2010	9:04:18	10.348	547.4	86.98	748.4	2363.8
4/28/2010	9:05:17	10.334	542.5	83.67	738.7	2346.4
4/28/2010	9:06:18	10.352	547.8	85.55	737.9	2344.3
4/28/2010	9:07:19	10.426	547.5	86.04	758.1	2395.6
4/28/2010	9:08:18	10.424	542.5	84.3	759.5	2417
4/28/2010	9:09:19	10.418	540.3	82.71	765.5	2430.6
4/28/2010	9:10:18	10.421	543.4	84.78	769.5	2422.2
4/28/2010	9:11:18	10.41	543.2	84.11	771.3	2431.1

4/28/2010	9:12:17	10.42	545.5	85.54	781.7	2458.2
Begin Traverse						
4/28/2010	9:13:18	10.376	545.3	85.29	769.7	2414.8
4/28/2010	9:14:17	10.391	544	84.61	775.1	2398
4/28/2010	9:15:18	10.341	548	85.93	756.3	2446.8
4/28/2010	9:16:19	10.343	549.8	87.76	731.5	2462.8
4/28/2010	9:17:18	10.396	547.7	86.31	741.2	2477.4
4/28/2010	9:18:18	10.418	545.8	86.24	735.2	2470.3
4/28/2010	9:19:17	10.398	545.2	85.05	715.3	2483.4
4/28/2010	9:20:18	10.4	547.3	86.11	728.2	2493.1
4/28/2010	9:21:19	10.424	549.2	87.61	738.9	2496.8
4/28/2010	9:22:18	10.423	546.3	86.61	737.6	2510.1
4/28/2010	9:23:19	10.431	547.1	87.12	743.6	2569.6
4/28/2010	9:24:17	10.356	546.6	86.78	707.2	2513.8
4/28/2010	9:25:18	10.235	542.5	83.82	703.8	2487.5
4/28/2010	9:26:17	10.244	541.7	83.7	713.9	2522.4
4/28/2010	9:27:18	10.207	546.6	85.31	699.6	2499.7
4/28/2010	9:28:19	10.226	548.4	86.51	712.9	2522.7
4/28/2010	9:29:18	10.218	541.7	83.2	709.2	2523.8
4/28/2010	9:30:19	10.221	545.9	85.35	693.3	2522.7
4/28/2010	9:31:18	10.204	546.3	86.02	698.2	2513.1
4/28/2010	9:32:19	10.212	547.3	86.03	710.2	2521.4
Average of Test Run		O2-1	CO-1	NOx-1	THC-1	CH4-1
		%	ppm	ppm	ppm	ppm
4/28/2010	9:32:19	10.337	545.6	85.02	707.2	2321.5
Test Run 7 End						

Final System Bias Check for Run 7 . STRATA Version 2.01

Operator:	RMC Environmental, Inc.	
Plant Name:	WMI-Westside	
Location:	Engine Outlet	
	Reference Cylinder Numbers	
	Zero	Span
O2-1	CC177437	CC22223
CO-1	CC22223	CC10518
NOx-1	CC22223	SG9150522
THC-1	CC22223	CC214403
CH4-1	CC22223	AAL19091

Date/Time	4/28/2010	9:38:11 PASSED			
Analyte	O2-1	CO-1	NOx-1	THC-1	CH4-1
Units	%	ppm	ppm	ppm	ppm
Zero Ref Cyl	0.00	0.00	0.00	0.00	0.00
Zero Cal	0.17	9.00	4.08	-2.20	18.70
Zero Avg	0.22	5.80	7.86	6.60	16.10
Zero Bias%	0.30	0.30	1.50	0.90	0.10
Zero Drift%	-0.50	0.00	-0.80	0.50	0.10
Span Ref Cyl	12.49	502.80	115.40	499.60	2510.00
Span Cal	12.43	496.20	116.83	498.10	2528.00
Span Avg	12.66	493.20	116.10	495.30	2416.90
Span Bias%	1.10	0.30	0.30	0.30	2.20
Span Drift%	-0.40	-0.30	-0.50	-1.40	-1.20
Ini Zero Avg	0.33	5.80	9.74	1.80	12.30
Ini Span Avg	12.74	496.70	117.33	509.80	2478.90
Run Avg	10.34	545.60	85.02	707.20	2321.50
Co	0.28	5.80	8.80	4.20	14.20
Cm	12.70	494.90	116.71	502.50	2447.90
Correct Avg	10.12	554.90	81.51	704.80	2379.70

Test Run 8 Begin. STRATA Version 2.01
Operator: RMC Environmental, Inc.
Plant Name: WMI-Westside
Location: Engine Outlet

Begin calculating run averages

		O2-1	CO-1	NOx-1	THC-1	CH4-1
		%	ppm	ppm	ppm	ppm
4/28/2010	9:41:02	10.203	544	84.9	658.5	2059.2
4/28/2010	9:42:03	10.213	543.1	85.72	668	2240.9
4/28/2010	9:43:02	10.214	544	85.01	660.9	2329.4
4/28/2010	9:44:03	10.217	547.9	87.45	656.6	2303.1
4/28/2010	9:45:02	10.21	545.5	86.02	692.4	2198.2
4/28/2010	9:46:02	10.197	543.8	84.98	686.7	2088.3
4/28/2010	9:47:03	10.21	543.4	84.36	698.4	2129.8
4/28/2010	9:48:02	10.198	544.1	85.46	684.4	2080.2
4/28/2010	9:49:03	10.2	549.1	87.91	695.3	2127
4/28/2010	9:50:02	10.203	545.4	86.7	697.1	2104.1
4/28/2010	9:51:03	10.204	545.8	86	686.4	2094.2
4/28/2010	9:52:04	10.224	544.2	86.26	691.7	2082.6
4/28/2010	9:53:02	10.211	543	85.29	686.4	2108.2
4/28/2010	9:54:03	10.219	543.9	86.48	700.8	2225.6
4/28/2010	9:55:02	10.222	539.8	84.66	715.3	2351.1
4/28/2010	9:56:02	10.223	545	86.61	722.1	2350.1
4/28/2010	9:57:03	10.194	545	86.27	708.4	2332.9
4/28/2010	9:58:02	10.213	549.1	88.9	731.9	2367.4
4/28/2010	9:59:03	10.223	543.5	86.13	734.2	2362.9
4/28/2010	10:00:02	10.213	540.8	84.78	735.6	2360.3
4/28/2010	10:01:02	10.221	546.8	87.71	739.5	2344.5
4/28/2010	10:02:03	10.241	540.6	85.6	743.4	2490.6
4/28/2010	10:03:02	10.257	542.2	85.75	751.4	2545.9
4/28/2010	10:04:03	10.229	538.9	83.6	749.1	2513.2
4/28/2010	10:05:02	10.224	542	85.15	747.5	2537.5
4/28/2010	10:06:02	10.232	542.1	85.66	747.1	2544
4/28/2010	10:07:03	10.227	542.9	85.8	746.8	2532.9
4/28/2010	10:08:02	10.245	544.6	87.09	756.1	2552.3
4/28/2010	10:09:03	10.273	536.6	83.26	759.4	2555.3
4/28/2010	10:10:04	10.284	539.7	84.72	750	2538.8
4/28/2010	10:11:02	10.283	537.7	84.37	744.8	2516.3
4/28/2010	10:12:03	10.271	540.2	84.64	736.6	2484.7
4/28/2010	10:13:02	10.276	539.7	84.87	743	2509.2
4/28/2010	10:14:03	10.271	541	85.51	755.4	2544.1
4/28/2010	10:15:03	10.285	540.2	85.47	754.6	2554.6
4/28/2010	10:16:02	10.287	541.3	84.95	750.5	2534.2
4/28/2010	10:17:03	10.291	541.3	85.37	760.5	2535.1
4/28/2010	10:18:02	10.298	540.9	84.65	757.1	2524
4/28/2010	10:19:03	10.279	540.7	84.59	764.7	2557.3
4/28/2010	10:20:03	10.269	542.6	84.9	773.4	2549.8

4/28/2010	10:21:02	10.26	545.8	87.11	774.2	2568.4
4/28/2010	10:22:03	10.251	546	86.55	770.4	2566.3
4/28/2010	10:23:02	10.257	548.2	87.49	771.9	2533.3
4/28/2010	10:24:03	10.283	542.2	85.59	774.8	2574.3
4/28/2010	10:25:03	10.274	540.3	84.4	781.9	2562.7
4/28/2010	10:26:02	10.293	538.9	84.42	789	2572
4/28/2010	10:27:03	10.283	536.3	81.88	764.1	2541.9
4/28/2010	10:28:02	10.278	542.5	85.28	769.3	2545.4
4/28/2010	10:29:02	10.288	543	85.23	753.7	2553.7
4/28/2010	10:30:03	10.289	540.8	84.96	714.5	2533.9
4/28/2010	10:31:02	10.267	541.5	84.1	704.8	2522.7
4/28/2010	10:32:02	10.262	544.4	85.46	713.9	2533.5
4/28/2010	10:33:03	10.268	544	85.41	716.6	2530.1
4/28/2010	10:34:04	10.281	542.7	85.66	723.2	2558.1
4/28/2010	10:35:02	10.26	540.2	84.55	711.3	2526.6
4/28/2010	10:36:03	10.257	542.4	84.97	714.6	2520.9
4/28/2010	10:37:02	10.247	542	84.37	717.8	2528.1
4/28/2010	10:38:03	10.249	544.5	85.49	712.7	2527.7
4/28/2010	10:39:02	10.239	541.7	84.7	724	2556.4
4/28/2010	10:40:03	10.246	542.1	85.13	719.3	2511.4
Average of Test Run		O2-1	CO-1	NOx-1	THC-1	CH4-1
		%	ppm	ppm	ppm	ppm
4/28/2010	10:40:03	10.246	542.7	85.44	729.4	2427

Test Run 8 End

Final System Bias Check for Run 8 . STRATA Version 2.01

Operator:	RMC Environmental, Inc.	
Plant Name:	WMI-Westside	
Location:	Engine Outlet	
	Reference Cylinder Numbers	
	Zero	Span
O2-1	CC177437	CC22223
CO-1	CC22223	CC10518
NOx-1	CC22223	SG9150522
THC-1	CC22223	CC214403
CH4-1	CC22223	AAL19091

Date/Time	4/28/2010	10:47:17 PASSED			
Analyte	O2-1	CO-1	NOx-1	THC-1	CH4-1
Units	%	ppm	ppm	ppm	ppm
Zero Ref Cyl	0.00	0.00	0.00	0.00	0.00
Zero Cal	0.17	9.00	4.08	-2.20	18.70
Zero Avg	0.23	5.90	7.41	11.10	8.30
Zero Bias%	0.30	0.30	1.30	1.30	0.20
Zero Drift%	0.00	0.00	-0.20	0.50	-0.20
Span Ref Cyl	12.49	502.80	115.40	499.60	2510.00
Span Cal	12.43	496.20	116.83	498.10	2528.00
Span Avg	12.66	497.10	115.52	492.20	2561.90
Span Bias%	1.10	0.10	0.50	0.60	0.70
Span Drift%	0.00	0.40	-0.20	-0.30	2.90
Ini Zero Avg	0.22	5.80	7.86	6.60	16.10
Ini Span Avg	12.66	493.20	116.10	495.30	2416.90
Run Avg	10.25	542.70	85.44	729.40	2427.00
Co	0.23	5.90	7.63	8.80	12.20
Cm	12.66	495.20	115.81	493.80	2489.40
Correct Avg	10.07	551.60	83.00	742.40	2446.80

Test Run 9 Begin. STRATA Version 2.01
Operator: RMC Environmental, Inc.
Plant Name: WMI-Westside
Location: Engine Outlet

		O2-1	CO-1	NOx-1	THC-1	CH4-1
		%	ppm	ppm	ppm	ppm
Begin calculating run averages						
4/28/2010	10:51:59	10.238	540.4	85.78	715.1	2389.3
4/28/2010	10:53:00	10.245	537.8	84.55	712.9	2451.6
4/28/2010	10:53:59	10.236	541.2	85.31	711.9	2443.8
4/28/2010	10:55:00	10.24	535.9	82.84	712.6	2479
4/28/2010	10:55:58	10.215	541.6	85.24	704.8	2412
4/28/2010	10:56:59	10.216	540.8	85.64	702.6	2403.6
4/28/2010	10:58:00	10.228	540.1	85.1	717.1	2436.1
4/28/2010	10:58:59	10.223	538.9	84.31	710.8	2416.5
4/28/2010	11:00:00	10.206	540.1	84.62	700.7	2404.2
4/28/2010	11:00:59	10.192	544.8	86.17	702.4	2408.9
4/28/2010	11:02:00	10.206	542.9	86.52	707	2408
4/28/2010	11:02:58	10.195	541.9	86.15	690.4	2378.2
4/28/2010	11:03:59	10.198	543.2	86.85	696.1	2407.1
4/28/2010	11:05:00	10.224	538.4	85.44	717.4	2447.6
4/28/2010	11:05:59	10.217	536.3	84.11	707.5	2407.2
4/28/2010	11:07:00	10.229	539.5	86.09	712.2	2423
4/28/2010	11:07:59	10.206	537	83.94	697.4	2403.4
4/28/2010	11:08:59	10.215	542	86.63	700.9	2392.6
4/28/2010	11:10:00	10.24	537.3	84.69	707.2	2399.8
4/28/2010	11:10:59	10.236	533.8	82.95	707.8	2388.6
4/28/2010	11:12:00	10.21	537.1	83.84	715.5	2397.5
4/28/2010	11:12:59	10.203	543.7	87.5	758.6	2435.7
4/28/2010	11:14:00	10.202	543.2	87.88	754.4	2428.7
4/28/2010	11:14:59	10.217	540.5	86.65	748.2	2405.4
4/28/2010	11:15:59	10.212	539.5	86.07	753.2	2383.3
4/28/2010	11:17:00	10.205	539.1	85.84	752.1	2392.7
4/28/2010	11:17:59	10.202	539.2	85.96	746.2	2368.6
4/28/2010	11:19:00	10.207	537	84.91	756	2369.9
4/28/2010	11:19:58	10.187	536	83.43	754.9	2397.2
4/28/2010	11:20:59	10.176	542.5	86.01	740.4	2341.8
4/28/2010	11:22:00	10.189	549.1	90.28	756.7	2375.6
4/28/2010	11:22:59	10.194	540.3	86.64	746.7	2332.2
4/28/2010	11:24:00	10.198	542.7	87.38	759.6	2377
4/28/2010	11:24:59	10.193	539.1	86.02	770.6	2420.4
4/28/2010	11:26:00	10.189	541.5	87.09	755.1	2352.3
4/28/2010	11:27:00	10.179	539.5	85.82	751.2	2358.1
4/28/2010	11:27:59	10.182	538.5	85.16	753.2	2359.9
4/28/2010	11:29:00	10.179	545.4	88.16	751.3	2347.8
4/28/2010	11:29:58	10.188	540.1	86.38	760.7	2382.4
4/28/2010	11:30:59	10.185	539.7	86.23	751.3	2346.8

4/28/2010	11:32:00	10.176	538.7	85.49	757.1	2352
4/28/2010	11:32:59	10.172	541.1	85.74	760.1	2427.2
4/28/2010	11:33:59	10.161	544.9	88.43	744.5	2513.1
4/28/2010	11:35:00	10.165	545.6	89.14	750.6	2535.1
4/28/2010	11:35:59	10.173	541.4	87.96	754	2539.8
4/28/2010	11:37:00	10.15	542.1	86.27	757.9	2565.3
4/28/2010	11:37:58	10.16	545.5	88.79	744.7	2573.2
4/28/2010	11:38:59	10.159	543.8	88.4	756.6	2595.3
4/28/2010	11:40:00	10.161	546.5	89.99	751	2569.9
4/28/2010	11:40:59	10.153	543	88.8	738.7	2573
4/28/2010	11:42:00	10.152	541.8	87.08	752.7	2610.1
4/28/2010	11:42:59	10.142	537.5	84.78	752.3	2586.4
4/28/2010	11:44:00	10.141	543.4	87.38	766.7	2616.3
4/28/2010	11:44:58	10.161	545.3	88.58	778.7	2639.4
4/28/2010	11:45:59	10.172	542.6	88.25	775.4	2621.7
4/28/2010	11:47:00	10.153	542.4	87.8	777.9	2612.4
4/28/2010	11:47:59	10.147	543.1	88.85	785.8	2657.6
4/28/2010	11:48:59	10.124	539.3	86.06	787.1	2649.5
4/28/2010	11:50:00	10.106	539.2	86.2	782	2636
4/28/2010	11:50:59	10.064	540	84.8	774.7	2655.4
Average of Test Run		O2-1	CO-1	NOx-1	THC-1	CH4-1
		%	ppm	ppm	ppm	ppm
4/28/2010	11:50:59	10.188	540.9	86.32	740.3	2456.7

Test Run 9 End

Final System Bias Check for Run 9 . STRATA Version 2.01

Operator:	RMC Environmental, Inc.	
Plant Name:	WMI-Westside	
Location:	Engine Outlet	
	Reference Cylinder Numbers	
	Zero	Span
O2-1	CC177437	CC22223
CO-1	CC22223	CC10518
NOx-1	CC22223	SG9150522
THC-1	CC22223	CC214403
CH4-1	CC22223	AAL19091

Date/Time	4/28/2010	11:58:08 PASSED			
Analyte	O2-1	CO-1	NOx-1	THC-1	CH4-1
Units	%	ppm	ppm	ppm	ppm
Zero Ref Cyl	0.00	0.00	0.00	0.00	0.00
Zero Cal	0.17	9.00	4.08	-2.20	18.70
Zero Avg	0.19	5.10	10.63	8.00	9.50
Zero Bias%	0.10	0.40	2.60	1.00	0.20
Zero Drift%	-0.20	-0.10	1.30	-0.30	0.00
Span Ref Cyl	12.49	502.80	115.40	499.60	2510.00
Span Cal	12.43	496.20	116.83	498.10	2528.00
Span Avg	12.59	495.30	115.16	503.70	2513.60
Span Bias%	0.80	0.10	0.70	0.60	0.30
Span Drift%	-0.30	-0.20	-0.10	1.10	-1.00
Ini Zero Avg	0.23	5.90	7.41	11.10	8.30
Ini Span Avg	12.66	497.10	115.52	492.20	2561.90
Run Avg	10.19	540.90	86.32	740.30	2456.70
Co	0.21	5.50	9.02	9.60	8.90
Cm	12.62	496.20	115.34	498.00	2537.70
Correct Avg	10.04	548.60	83.90	747.50	2429.60

APPENDIX C. TEST QA/ QC FORMS

Calibration Gas Certificates of Analysis

Meterbox Calibrations

Pitot Calibration

EXAMPLE CALCULATIONS
Instrumental Methods

Company: Waste Management of Texas
Source: Engs 1-3
Test Location: Engine Plant
RMCEInc Project #: 2010-15969

Normal Load: HIGH LOAD
Run: 1
Start Time: 4/27/2010 9:05
End Time: 4/27/2010 10:05
Run Duration (Min.) : 1:00

Emission Rate (lbs/mmBtu)

NO_xlbs/mmbtu = F-Factor * Conv-Factor * NOxppmd * 20% O2 / (20.9% O2 -O2%d)

NO_xlbs/mmbtu = 83.54 * 9486 * 0.0000001194 * 20.9 / (20.9- 10.06)

NO_xlbs/mmbtu = 0.182

Emission Rate (ppm@15% O_2)

NOx ppm@15% O_2 = NOx ppmd * 5.9 / (20.9% O2 -O2%d)

NOx ppm@15% O_2 = 83.54 * 5.9 / (20.9 - 10.06)

NOx ppm@15% O_2 = 45.46

Emission Rate (g / BHP-Hr)

NOx g / BHP-Hr = NOx lb / Hr * 453.593 / Engine Horsepower

NOx g / BHP-Hr = 2.67 * 453.593 / 2233

1148 = Horsepower for 3516's
2233 = Horsepower for 3520's

NOx g / BHP-Hr = 0.54

Emission Rate (lbs/Hr)

NO_xlbs/Hr = DSCFM * Conv-Factor * NOxppmd * 60

NO_xlbs/Hr = 4445 * 83.54 * 0.0000001194 * 60

NO_xlbs/Hr = 2.66

Emission Rate (lbs/Mw - Hr)

NO_xlbs/Mw-Hr = lb/Hr / Mega Watts

NO_xlbs/Mw-Hr = 2.67 / 1.6 Mega Watts"

NO_xlbs/Mw-Hr = 1.66

Meter Box Full Test Calibration

DATE: 10/19/2009 Operator: Joe Ward

Meter Box No #3	Meter Box H@: 1.7258	Meter Box Yd 1.0000	Barometric Pressure: 29.71

				Standard Meter Gas Volume			Meter Box Gas Volume (ft³)			Std. Meter Temperature (°F)			Meter Box Temperature (°F)					
Q	ΔP	H	Yds	Initial	Final	Vf	Initial	Final	Vf	Inlet	Outlet	Avg.	Inlet	Outlet	Avg.	Time	Yd	H@
0.94	0.060	3.00	1.0000	[illegible]	5.005	5.005	306.043	311.230	5.187	69.0	69.0	69.0	89.0	81.0	85.0	5.26	1.0030	1.8403
0.94	0.060	3.00	1.0000	[illegible]	5.010	5.010	311.240	316.415	5.185	69.0	69.0	69.0	90.0	81.0	85.5	5.30	1.0053	1.8647
0.70	0.040	1.50	1.0000	[illegible]	7.060	7.060	324.756	332.052	7.294	69.0	69.0	69.0	89.0	82.0	85.5	10.42	1.0028	1.6759
0.70	0.040	1.50	1.0000	[illegible]	5.005	5.005	332.052	337.248	5.196	69.0	69.0	69.0	89.0	82.0	85.5	7.06	0.9980	1.65[illegible]
0.40	0.030	0.50	1.0000	[illegible]	5.005	5.005	346.906	352.073	5.167	69.0	69.0	69.0	85.0	83.0	84.0	12.32	0.9981	1.67[illegible]
0.41	0.030	0.50	1.0000	[illegible]	5.095	5.095	352.073	357.341	5.268	69.0	69.0	69.0	85.0	83.0	84.0	12.62	0.9966	1.64[illegible]
															AVERAGE		1.0006	1.7258

Millennium Instruments Inc.
2402 Springridge Drive unit A
Spring Grove IL. 60081
PHONE#(815)675-3225
FAX#(815)675-6965
E-mail millennium@millinst.com
www.millinst.com

Vacuum Gauge

(in. Hg)	Gauge
5.0	5.0
10.0	10.0
15.0	15.0
20.0	20.0
25.0	24.5

PreTest Meterbox Audit

Plant:	Waste Management of Texas	**Test Date:**	4/27/2010
Location:	Westside Landfill	**Auditor:**	GC
		Project #:	2010-15969

Meterbox I.D.:	RMC003	**Level Manometer:**	Yes
Gamma:	1.001	**Zero Manometer:**	Yes
Delta H@	1.726	**Barometric Pressure:**	29.79

	Audit Time (Min)	Dry Gas Meter Reading (Ft^3)	Dry Gas Meter Temperature (°F)
Initial Readings =	0.0	963.830	75
Final Readings =	10.0	971.550	77

Run Time (Minutes) **Theta** =	10		
Gas Volume Sampled V_m =		7.7200	
Average T_m =			76.0

	Audit Gamma Limits
Lower Gamma Limit **LGL**=	*0.96 * Y =* 0.961
Upper Gamma Limit **UGL**=	*1.04 * Y =* 1.041

Audit Gamma Y_c =	**0.9810**
Meter Box Audit =	**Passed**

Ideal Sampling Rate = 0.75

$$Y_c = (Theta/V_m) * [\{(29.92/(460+68) * 0.75^2) * (T_m + 460)\} / P_{bar}]^{0.5}$$

Passed = LGL < Y_c < UGL

Failed = LGL > Y_c or Y_c > UGL

Audit Performed By: ONSITE By G. Clay

S-TYPE PITOT TUBE INSPECTION

Project Number	**2010-15969**		
Pitot Tube Number	**M2-36-2**		
Level	Y	(Y/N)	PASS
Obstructions	N	(Y/N)	PASS
Damaged	N	(Y/N)	PASS
Type of material	SS		
-10 < alpha1 < +10	0.5	Degrees	PASS
-10 < alpha2 < +10	0.5	Degrees	PASS
-5 < Beta1 < +5	0.0	Degrees	PASS
-5 < Beta2 < +5	0.0	Degrees	PASS
z or Gamma	0.0	Degrees	
w or Theta	0.5	Degrees	
A	0.795	Inches	
{z = A Tan (Gamma)} < 0.125	0.004	Inches	PASS
{w = A Tan (Theta)} < 0.03125	0.008	Inches	PASS
$0.1875 < D_t < 0.375$	0.375	Inches	PASS
$1.05\ D_t < P_a < 1.5\ D_t$	0.395	Inches	PASS
$1.05\ D_t < P_b < 1.5\ D_t$	0.394	Inches	PASS
$\lvert P_a - P_b \rvert < 0.0625$	0.001	Inches	PASS
Distance T/C set back > 2.0	2.440	Inches	PASS

alpha1 & alpha 2	are the angles of deflection that faces of the pitot tube are off from the perpendicular line of the traverse axis.
Beta1 & Beta2	are the angles of deflection that faces of the pitot tube from the line parallel to the longitudinal tube axis.
Gamma	is the angle between the line between the two pitot tips and the theoretical level line between the tips.
Theta	is the angle between the two center lines of the pitot faces.
A	is the distance between the two pitot tips.
z	is the distance between the two lengths of the pitot tips.
w	is the distance between the two center lines of each of the pitot tubes.
D_t	is the outside diameter of the tubing used.
P_a & P_b	is the distance between the pitot tube face and the longitudinal tube axis.

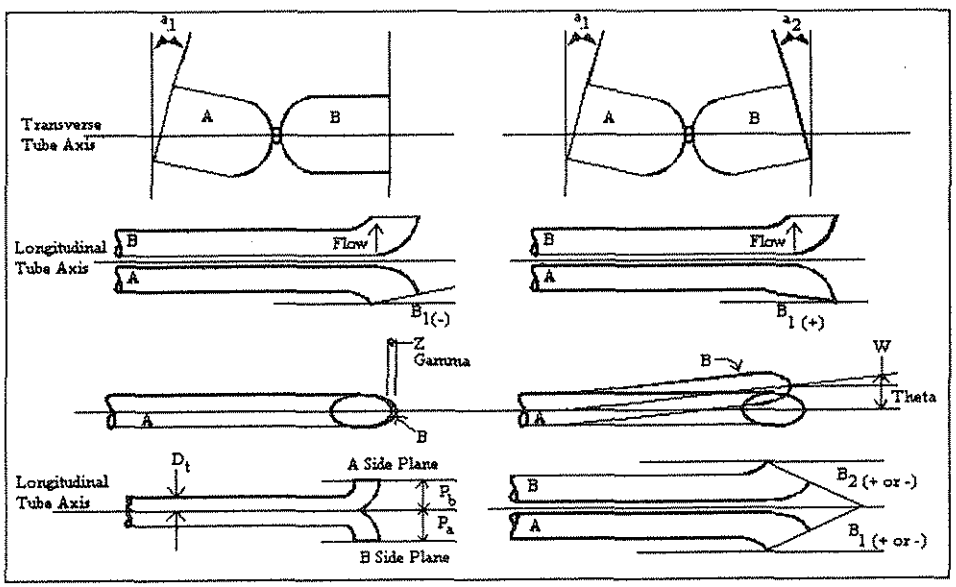

COMMENTS:

I certify that this pitot tube meets or exceeds all specifications, criteria and/ or applicable design features and is hereby assigned a pitot tube calibration factor of 0.84.

Signature:

Date: 4/27/10

RMC ENvironmental, Inc.

NO2-NO CONVERSION EFFICIENCY

RMCEInc-Air Monitoring Division

Manufacture/ Model: TECO 42i-HL
Serial Number: 42iHL-ANSBPCC

Instrument Span: 250
Date Of Test: 4/27/10

RESULTS			
NOx Response:	45.5	Peak response recorded during converter efficiency test:	22.52 ppm
NO Response:	1.1	Response recorded at the end of the 30-minute test:	22.04 ppm
NO2 Response:	44.4	Percent decrease from the peak response:	2.13%
Converter Efficiency:	**99.06 %**	**Converter Efficiency:**	**97.87%**

SPECIFICATIONS (EPA METHOD 7E): RESPONSE AT 30 MINUTES MUST NOT DECREASE BY MORE THAN 2% OF THE PEAK RESPONSE VALUE.

NO2-NO CONVERTER EFFICIENCY TEST PROCEDURES

RMCEInc-AMD followed the manufacturer's recommended set-up procedures contained in the analyzer manual. After the initial set-up procedures were completed, the electronics of the monitor were adjusted according to the manufacturer's guidelines. The monitor was then calibrated by flowing NO calibration gases into the instrument. A calibration gas was then diluted (1:1) with purified compressed air. The gas mixture was routed through a manifold into a Tedlar bag, which was previously leak tested and evacuated. This arrangement afforded sufficient volume to allow the sampling system to operate for the required 30 minutes. Immediately after the bag was filled, the manifold was connected to the sampling system. The system was turned on and the analyzer response was recorded on a data acquisition system. The one minute averages from the data acquisition system was analyzed for the peak response and the response at the end of the 30-minute sampling period.

AIR LIQUIDE Air Liquide America Specialty Gases LLC Scott

COMPLIANCE CLASS

Dual-Analyzed Calibration Standard

1290 COMBERMERE STREET, TROY, MI 48083 Phone: 248-589-2950 Fax: 248-589-213

CERTIFICATE OF ACCURACY: EPA Protocol Gas

Assay Laboratory

P.O. No.: 58028-71-65000

AIR LIQUIDE AMERICA SPECIALTY GASES LLC Project No.: 05-86284-017
1290 COMBERMERE STREET
TROY, MI 48083

Customer

CLEAN AIR ENGINEERING
DON ALLEN
500 W. WOOD STREET
PALATINE IL 60067

ANALYTICAL INFORMATION

This certification was performed according to EPA Traceability Protocol For Assay & Certification of Gaseous Calibration Standards; Procedure G-1; September, 1997.

Cylinder Number: CC161935 **Certification Date:** 05Apr2010 **Exp. Date:** 04Apr2013
Cylinder Pressure*:** 2000 PSIG

COMPONENT	CERTIFIED CONCENTRATION (Moles)		ANALYTICAL ACCURACY**	TRACEABILITY
METHANE	1,500	PPM	+/- 2%	NIST and VSL
NITROGEN		BALANCE		

*** Do not use when cylinder pressure is below 150 psig.

** Analytical accuracy is based on the requirements of EPA Protocol procedures , September 1997.

REFERENCE STANDARD

TYPE/SRM NO.	EXPIRATION DATE	CYLINDER NUMBER	CONCENTRATION	COMPONENT
NTRM 1000	01Jul2011	K005406	1001. PPM	METHANE

INSTRUMENTATION

INSTRUMENT/MODEL/SERIAL#	DATE LAST CALIBRATED	ANALYTICAL PRINCIPLE
VARIAN/3400/7506	26Mar2010	TCD/FID

APPROVED BY: ROBERT LESNIAK

AIR LIQUIDE Air Liquide America Specialty Gases LLC Scott™

COMPLIANCE CLASS

Dual-Analyzed Calibration Standard

1290 COMBERMERE STREET, TROY, MI 48083 Phone: 248-589-2950 Fax: 248-589-2134

CERTIFICATE OF ACCURACY: EPA Protocol Gas

Assay Laboratory

AIR LIQUIDE AMERICA SPECIALTY GASES LLC
1290 COMBERMERE STREET
TROY, MI 48083

P.O. No.: 58028-71-65000
Project No.: 05-86284-018

Customer

CLEAN AIR ENGINEERING
DON ALLEN
500 W. WOOD STREET
PALATINE IL 60067

ANALYTICAL INFORMATION

This certification was performed according to EPA Traceability Protocol For Assay & Certification of Gaseous Calibration Standards; Procedure G-1; September, 1997.

Cylinder Number: AAL19091 **Certification Date:** 05Apr2010 **Exp. Date:** 04Apr2013
Cylinder Pressure*:** 2000 PSIG

COMPONENT	CERTIFIED CONCENTRATION (Moles)		ANALYTICAL ACCURACY**	TRACEABILITY
METHANE	2,510	PPM	+/- 2%	NIST and VSL
NITROGEN		BALANCE		

*** Do not use when cylinder pressure is below 150 psig.

** Analytical accuracy is based on the requirements of EPA Protocol procedures , September 1997.

REFERENCE STANDARD

TYPE/SRM NO.	EXPIRATION DATE	CYLINDER NUMBER	CONCENTRATION	COMPONENT
NTRM 1000	01Jul2011	K005406	1001. PPM	METHANE

INSTRUMENTATION

INSTRUMENT/MODEL/SERIAL#	DATE LAST CALIBRATED	ANALYTICAL PRINCIPLE
VARIAN/3400/7506	26Mar2010	TCD/FID

APPROVED BY: ROBERT LESNIAK

AIR LIQUIDE Air Liquide America Specialty Gases LLC Scott™

COMPLIANCE CLASS

Dual-Analyzed Calibration Standard

1290 COMBERMERE STREET, TROY, MI 48083 Phone: 248-589-2950 Fax: 248-589-21

CERTIFICATE OF ACCURACY: EPA Protocol Gas

Assay Laboratory

AIR LIQUIDE AMERICA SPECIALTY GASES LLC
1290 COMBERMERE STREET
TROY, MI 48083

P.O. No.: 58028-71-65000
Project No.: 05-86284-019

Customer

CLEAN AIR ENGINEERING
DON ALLEN
500 W. WOOD STREET
PALATINE IL 60067

ANALYTICAL INFORMATION

This certification was performed according to EPA Traceability Protocol For Assay & Certification of Gaseous Calibration Standards; Procedure G-1; September, 1997.

Cylinder Number: ALM059469 **Certification Date:** 05Apr2010 **Exp. Date:** 04Apr2013
Cylinder Pressure*:** 2000 PSIG

COMPONENT	CERTIFIED CONCENTRATION (Moles)		ANALYTICAL ACCURACY**	TRACEABILITY
METHANE	4,540	PPM	+/- 2%	NIST and VSL
NITROGEN		BALANCE		

*** Do not use when cylinder pressure is below 150 psig.

** Analytical accuracy is based on the requirements of EPA Protocol procedures , September 1997.

REFERENCE STANDARD

TYPE/SRM NO.	EXPIRATION DATE	CYLINDER NUMBER	CONCENTRATION	COMPONENT
NTRM 1000	01Jul2011	K005406	1001. PPM	METHANE

INSTRUMENTATION

INSTRUMENT/MODEL/SERIAL#	DATE LAST CALIBRATED	ANALYTICAL PRINCIPLE
VARIAN/3400/7506	26Mar2010	TCD/FID

APPROVED BY:
ROBERT LESNIAK

Airgas

Airgas Speciality Gases
12722 S. Wentworth Avenue
Chicago, IL 60628
1-773-785-3000
FAX: 1-773-785-1928
www.airgas.com

CERTIFICATE OF ANALYSIS
Grade of Product: EPA Protocol

Part Number:	E02NI99E15A0681	Reference Number:	54-124152570-4
Cylinder Number:	SG9102081ALB	Cylinder Volume:	144 Cu.Ft.
Laboratory:	ASG - Chicago - IL	Cylinder Pressure:	2015 PSIG
Analysis Date:	Sep 19, 2008	Valve Outlet:	660

Expiration Date: Sep 19, 2011

Certification performed in accordance with "EPA Traceability Protocol (Sept. 1997)" using the assay procedures listed. Analytical Methodology does not require correction for analytical interferences. This cylinder has a total analytical uncertainty as stated below with a confidence level of 95%. There are no significant impurities which affect the use of this calibration mixture. All concentrations are on a volume/volume basis unless otherwise noted.
Do Not Use This Cylinder below 150 psig.i.e. 1 Mega Pascal

ANALYTICAL RESULTS

Component	Requested Concentration	Actual Concentration	Protocol Method	Total Relative Uncertainty
PROPANE	300.0 PPM	300.0 PPM	G1	+/- 1% NIST Traceable
NITROGEN	Balance			

CALIBRATION STANDARDS

Type	Lot ID	Cylinder No	Concentration	Expiration Date
NTRM/C3H8	51919	SG9101963ALB	483.6PPM PROPANE/	Jul 01, 2009

ANALYTICAL EQUIPMENT

Instrument/Make/Model	Analytical Principle	Last Multipoint Calibration
Nicolet Nexus	FTIR	Sep 08, 2008

Triad Data Available Upon Request

Notes:

Curt Stewart

QA Approval

CERTIFICATE OF ANALYSIS
Grade of Product: EPA Protocol

Part Number:	E02NI99E15A0932	Reference Number:	54-124190399-1
Cylinder Number:	CC214403	Cylinder Volume:	144 Cu.Ft.
Laboratory:	ASG - Chicago - IL	Cylinder Pressure:	2015 PSIG
Analysis Date:	Sep 10, 2009	Valve Outlet:	350

Expiration Date: Sep 10, 2012

Certification performed in accordance with "EPA Traceability Protocol (Sept. 1997)" using the assay procedures listed. Analytical Methodology does not require correction for analytical interferences. This cylinder has a total analytical uncertainty as stated below with a confidence level of 95%. There are no significant impurities which affect the use of this calibration mixture. All concentrations are on a volume/volume basis unless otherwise noted.
Do Not Use This Cylinder below 150 psig.i.e. 1 Mega Pascal

ANALYTICAL RESULTS

Component	Requested Concentration	Actual Concentration	Protocol Method	Total Relative Uncertainty
PROPANE	500.0 PPM	499.6 PPM	G1	+/- 1% NIST Traceable
NITROGEN	Balance			

CALIBRATION STANDARDS

Type	Lot ID	Cylinder No	Concentration	Expiration Date
NTRM/C3H8	1	XC003616B	453PPM PROPANE/AIR	Oct 02, 2011

ANALYTICAL EQUIPMENT

Instrument/Make/Model	Analytical Principle	Last Multipoint Calibration
Nicolet Nexus	FTIR	Aug 21, 2009

Triad Data Available Upon Request

Notes:

Signature on file

QA Approval

Airgas

Airgas Speciality Gases
12722 S. Wentworth Avenue
Chicago, IL 60628
1-773-785-3000
FAX: 1-773-785-1928
www.airgas.com

CERTIFICATE OF ANALYSIS
Grade of Product: EPA Protocol

Part Number:	E02NI99E15A0477	Reference Number:	54-124152570-1
Cylinder Number:	CC21153	Cylinder Volume:	144 Cu Ft.
Laboratory:	ASG - Chicago - IL	Cylinder Pressure:	2015 PSIG
Analysis Date:	Sep 19, 2008	Valve Outlet:	350

Expiration Date: Sep 19, 2011

Certification performed in accordance with "EPA Traceability Protocol (Sept. 1997)" using the assay procedures listed. Analytical Methodology does not require correction for analytical interferences. This cylinder has a total analytical uncertainty as stated below with a confidence level of 95%. There are no significant impurities which affect the use of this calibration mixture. All concentrations are on a volume/volume basis unless otherwise noted.
Do Not Use This Cylinder below 150 psig.i.e. 1 Mega Pascal

ANALYTICAL RESULTS

Component	Requested Concentration	Actual Concentration	Protocol Method	Total Relative Uncertainty
PROPANE	850.0 PPM	842.9 PPM	G1	+/- 1% NIST Traceable
NITROGEN	Balance			

CALIBRATION STANDARDS

Type	Lot ID	Cylinder No	Concentration	Expiration Date
NTRM	010506	SG9133675	965.6PPM PROPANE/	May 01, 2012

ANALYTICAL EQUIPMENT

Instrument/Make/Model	Analytical Principle	Last Multipoint Calibration
Nicolet Nexus	FTIR	Sep 08, 2008

Triad Data Available Upon Request

Notes:

Art Stewart

QA Approval

Airgas

CERTIFICATE OF ANALYSIS
Grade of Product: EPA Protocol

Airgas Specialty Gases
6421 Meadowa Road
Maumee, OH 43537-9760
(419) 893-7726
FAX (419) 893-2963
www.airgas.com

Part Number:	E02NI99E15A0080	Reference Number:	113-124136020-8
Cylinder Number:	CC10309	Cylinder Volume:	144 Cu.Ft.
Laboratory:	ASG - Maumee - OH	Cylinder Pressure:	2015 PSIG
Analysis Date:	May 08, 2008	Valve Outlet:	350

Expiration Date: May 08, 2011

Certification performed in accordance with "EPA Traceability Protocol (Sept. 1997)" using the assay procedures listed. Analytical Methodology does not require correction for analytical interferences. This cylinder has a total analytical uncertainty as stated below with a confidence level of 95%. There are no significant impurities which affect the use of this calibration mixture. All concentrations are on a volume/volume basis unless otherwise noted.
Do Not Use This Cylinder below 150 psig.i.e. 1 Mega Pascal

ANALYTICAL RESULTS

Component	Requested Concentration	Actual Concentration	Protocol Method	Total Relative Uncertainity
CARBON MONOXIDE	250.0 PPM	255.8 PPM	G1	+/- 1% NIST Traceable
NITROGEN	Balance			

CALIBRATION STANDARDS

Type	Lot ID	Cylinder No	Concentration	Expiration Date
NTRM	051204	CC180009	99.43PPM CARBON MONOXIDE/NITROGEN	Feb 02, 2009
NTRM	051205	CC180694	495.8PPM CARBON MONOXIDE/NITROGEN	Feb 02, 2009

ANALYTICAL EQUIPMENT

Instrument/Make/Model	Analytical Principle	Last Multipoint Calibration
022-Horiba VIA-510	NDIR	Apr 16, 2008

Triad Data Available Upon Request

Notes:

QA Approval

Airgas

Airgas Specialty Gases
12722 S. Wentworth Avenue
Chicago, IL 60628
1-773-785-3000
FAX: 1-773-785-1928
www.airgas.com

CERTIFICATE OF ANALYSIS
Grade of Product: EPA Protocol

Part Number:	E02NI99E15A3168	Reference Number:	54-124152573-3
Cylinder Number:	CC10518	Cylinder Volume:	144 Cu.Ft.
Laboratory:	ASG - Chicago - IL	Cylinder Pressure:	2015 PSIG
Analysis Date:	Sep 30, 2008	Valve Outlet:	660

Expiration Date: Sep 30, 2011

Certification performed in accordance with "EPA Traceability Protocol (Sept. 1997)" using the assay procedures listed. Analytical Methodology does not require correction for analytical interferences. This cylinder has a total analytical uncertainty as stated below with a confidence level of 95%. There are no significant impurities which affect the use of this calibration mixture. All concentrations are on a volume/volume basis unless otherwise noted.
Do Not Use This Cylinder below 150 psig.i.e. 1 Mega Pascal

ANALYTICAL RESULTS

Component	Requested Concentration	Actual Concentration	Protocol Method	Total Relative Uncertainty
CARBON MONOXIDE	500.0 PPM	502.8 PPM	G1	+/- 1% NIST Traceable
NITROGEN	Balance			

CALIBRATION STANDARDS

Type	Lot ID	Cylinder No	Concentration	Expiration Date
NTRM/CO	5120510	CC179949	495.8PPM CARBON MONOXIDE/	Feb 02, 2009

ANALYTICAL EQUIPMENT

Instrument/Make/Model	Analytical Principle	Last Multipoint Calibration
Nicolet Nexus	FTIR	Sep 08, 2008

Triad Data Available Upon Request

Notes:

QA Approval

Airgas

Airgas Speciality Gases
12722 S. Wentworth Avenue
Chicago, IL 60628
1-773-785-3000
FAX: 1-773-785-1928
www.airgas.com

CERTIFICATE OF ANALYSIS
Grade of Product: EPA Protocol

Part Number:	E02NI99E15A0101	Reference Number:	54-124176834-1
Cylinder Number:	SG9198829BAL	Cylinder Volume:	144 Cu.Ft.
Laboratory:	ASG - Chicago - IL	Cylinder Pressure:	2015 PSIG
Analysis Date:	May 12, 2009	Valve Outlet:	350

Expiration Date: May 12, 2012

Certification performed in accordance with "EPA Traceability Protocol (Sept. 1997)" using the assay procedures listed. Analytical Methodology does not require correction for analytical interferences. This cylinder has a total analytical uncertainty as stated below with a confidence level of 95%. There are no significant impurities which affect the use of this calibration mixture. All concentrations are on a volume/volume basis unless otherwise noted.
Do Not Use This Cylinder below 150 psig.i.e. 1 Megapascal

ANALYTICAL RESULTS

Component	Requested Concentration	Actual Concentration	Protocol Method	Total Relative Uncertainty
CARBON MONOXIDE	1000 PPM	1004 PPM	G1	+/- 1% NIST Traceable
NITROGEN	Balance			

CALIBRATION STANDARDS

Type	Lot ID	Cylinder No	Concentration	Expiration Date
NTRM/CO	80604	CC255866	1002.4PPM CARBON MONOXIDE/NITROGEN	Apr 15, 2012

ANALYTICAL EQUIPMENT

Instrument/Make/Model	Analytical Principle	Last Multipoint Calibration
Nicolet Nexus	FTIR	May 06, 2009

Triad Data Available Upon Request

Notes:

QA Approval

Airgas

Airgas Specialty Gases
12722 S. Wentworth Avenue
Chicago, IL 60628
1-773-785-3000
FAX: 1-773-785-1928
www.airgas.com

CERTIFICATE OF ANALYSIS
Grade of Product: EPA Protocol

Part Number:	E03NI99E15A0370	Reference Number:	54-124152569-2
Cylinder Number:	CC131936	Cylinder Volume:	144 Cu.Ft.
Laboratory:	ASG - Chicago - IL	Cylinder Pressure:	2015 PSIG
Analysis Date:	Oct 01, 2008	Valve Outlet:	650

Expiration Date: Oct 01, 2010

Certification performed in accordance with "EPA Traceability Protocol (Sept. 1997)" using the assay procedures listed. Analytical Methodology does not require correction for analytical interferences. This cylinder has a total analytical uncertainty as stated below with a confidence level of 95%. There are no significant impurities which affect the use of this calibration mixture. All concentrations are on a volume/volume basis unless otherwise noted.
Do Not Use This Cylinder below 150 psig..e. 1 Mega Pascal

ANALYTICAL RESULTS

Component	Requested Concentration	Actual Concentration	Protocol Method	Total Relative Uncertainty
NITRIC OXIDE	50.00 PPM	50.97 PPM	G1	+/- 1% NIST Traceable
SULFUR DIOXIDE	50.00 PPM	50.51 PPM	G1	+/- 1% NIST Traceable
NITROGEN	Balance			

Total oxides of nitrogen	50.98 PPM	For Reference Only

CALIBRATION STANDARDS

Type	Lot ID	Cylinder No	Concentration	Expiration Date
NTRM	60610	CC205936	49.38PPM NITRIC OXIDE/	May 01, 2010
NTRM/SO2	052405	CC208182	45.91PPM SULFUR DIOXIDE/	Sep 12, 2010

ANALYTICAL EQUIPMENT

Instrument/Make/Model	Analytical Principle	Last Multipoint Calibration
Thermo 6700	FTIR	Sep 08, 2008
Thermo 6700	FTIR	Sep 08, 2008

Triad Data Available Upon Request

Notes:

Curt Stewart

QA Approval

Airgas

Airgas Speciality Gases
12722 S. Wentworth Avenue
Chicago, IL 60628
1-773-785-3600
FAX: 1-773-785-1928
www.airgas.com

CERTIFICATE OF ANALYSIS
Grade of Product: EPA Protocol

Part Number:	E03NI99E15A01Q4	Reference Number:	54-124152570-11
Cylinder Number:	SG9150522BAL	Cylinder Volume:	144 Cu.Ft.
Laboratory:	ASG - Chicago - IL	Cylinder Pressure:	2015 PSIG
Analysis Date:	Sep 25, 2008	Valve Outlet:	660

Expiration Date: Sep 25, 2010

Certification performed in accordance with "EPA Traceability Protocol (Sept. 1997)" using the assay procedures listed. Analytical Methodology does not require correction for analytical interferences. This cylinder has a total analytical uncertainty as stated below with a confidence level of 95%. There are no significant impurities which affect the use of this calibration mixture. All concentrations are on a volume/volume basis unless otherwise noted.
Do Not Use This Cylinder below 150 psig.i.e. 1 Mega Pascal

ANALYTICAL RESULTS

Component	Requested Concentration	Actual Concentration	Protocol Method	Total Relative Uncertainty
NITRIC OXIDE	115.0 PPM	115.3 PPM	G1	+/- 1% NIST Traceable
SULFUR DIOXIDE	115.0 PPM	115.9 PPM	G1	+/- 1% NIST Traceable
NITROGEN	Balance			

Total oxides of nitrogen 115.4 PPM For Reference Only

CALIBRATION STANDARDS

Type	Lot ID	Cylinder No	Concentration	Expiration Date
NTRM/NO	60602	CC208165	257.0PPM NITRIC OXIDE/NITROGEN	Jan 01, 2010
NTRM	10509	SG9138224BAL	173.0PPM SULFUR DIOXIDE/	May 01, 2011

ANALYTICAL EQUIPMENT

Instrument/Make/Model	Analytical Principle	Last Multipoint Calibration
Thermo 6700	FTIR	Sep 08, 2008
Thermo 6700	FTIR	Sep 08, 2008

Triad Data Available Upon Request

Notes: Rick Dyle

QA Approval

Airgas

CERTIFICATE OF ANALYSIS
Grade of Product: EPA Protocol

Airgas Speciality Gases
12722 S. Wentworth Avenue
Chicago, IL 60628
1-773-785-3000
FAX: 1-773-785-1928
http://www.airgas.com

Part Number:	E03NI99E15A0391	Reference Number:	54-124193110-6
Cylinder Number:	CC177437	Cylinder Volume:	144 Cu.Ft.
Laboratory:	ASG - Chicago - IL	Cylinder Pressure:	2015 PSIG
Analysis Date:	Oct 08, 2009	Valve Outlet:	660

Expiration Date: Oct 08, 2011

Certification performed in accordance with "EPA Traceability Protocol (Sept. 1997)" using the assay procedures listed. Analytical Methodology does not require correction for analytical interferences. This cylinder has a total analytical uncertainty as stated below with a confidence level of 95%. There are no significant impurities which affect the use of this calibration mixture. All concentrations are on a volume/volume basis unless otherwise noted.
Do Not Use This Cylinder below 150 psig.i.e. 1 Mega Pascal

ANALYTICAL RESULTS

Component	Requested Concentration	Actual Concentration	Protocol Method	Total Relative Uncertainty
NITRIC OXIDE	250.0 PPM	256.8 PPM	G1	+/- 1% NIST Traceable
SULFUR DIOXIDE	250.0 PPM	249.5 PPM	G1	+/- 1% NIST Traceable
NITROGEN	Balance			
Total oxides of nitrogen		256.9 PPM		For Reference Only

CALIBRATION STANDARDS

Type	Lot ID	Cylinder No	Concentration	Expiration Date
NTRM/SO2	08061603	CC254551	247PPM SULFUR DIOXIDE/	Oct 15, 2012
NTRM/NO	1	CC286544	250.6PPM NITRIC OXIDE/NITROGEN	Feb 01, 2011

ANALYTICAL EQUIPMENT

Instrument/Make/Model	Analytical Principle	Last Multipoint Calibration
Thermo 6700	FTIR	Sep 29, 2009
Thermo 6700	FTIR	Sep 29, 2009

Triad Data Available Upon Request

Notes:

QA Approval

Airgas

Airgas Specialty Gases
12722 S. Wentworth Avenue
Chicago, IL 60628
1-773-785-3000
FAX: 1-773-785-1928
www.airgas.com

CERTIFICATE OF ANALYSIS
Grade of Product: EPA Protocol

Part Number:	E03NI61E15A2839	Reference Number:	54-124193110-4
Cylinder Number:	CC147760	Cylinder Volume:	158 Cu.Ft.
Laboratory:	ASG - Chicago - IL	Cylinder Pressure:	2015 PSIG
Analysis Date:	Oct 06, 2009	Valve Outlet:	590

Expiration Date: Oct 06, 2012

Certification performed in accordance with "EPA Traceability Protocol (Sept. 1997)" using the assay procedures listed. Analytical Methodology does not require correction for analytical interferences. This cylinder has a total analytical uncertainty as stated below with a confidence level of 95%. There are no significant impurities which affect the use of this calibration mixture. All concentrations are on a volume/volume basis unless otherwise noted.
Do Not Use This Cylinder below 150 psig.i.e. 1 Mega Pascal

ANALYTICAL RESULTS

Component	Requested Concentration	Actual Concentration	Protocol Method	Total Relative Uncertainty
CARBON DIOXIDE	17.50 %	16.98 %	G1	+/- 1% NIST Traceable
OXYGEN	20.90 %	20.85 %	G1	+/- 1% NIST Traceable
NITROGEN	Balance			

CALIBRATION STANDARDS

Type	Lot ID	Cylinder No	Concentration	Expiration Date
NTRM/O2	60608	CC206109	22.51% OXYGEN/NITROGEN	May 01, 2010
NTRM/CO2	40604	XC034327B	19.84% CARBON DIOXIDE/	May 15, 2012

ANALYTICAL EQUIPMENT

Instrument/Make/Model	Analytical Principle	Last Multipoint Calibration
HORIBA 510	NDIR	Sep 21, 2009
HORIBA MPA-510	Paramagnetic	Sep 21, 2009

Triad Data Available Upon Request

Notes:

QA Approval

CERTIFICATE OF ANALYSIS
Grade of Product: EPA Protocol

Part Number:	E03NI78E15A56Y2	Reference Number:	54-124163364-2
Cylinder Number:	CC22223	Cylinder Volume:	151 Cu.Ft.
Laboratory:	ASG - Chicago - IL	Cylinder Pressure:	2015 PSIG
Analysis Date:	Jan 12, 2009	Valve Outlet:	590

Expiration Date: Jan 12, 2012

Certification performed in accordance with "EPA Traceability Protocol (Sept. 1997)" using the assay procedures listed. Analytical Methodology does not require correction for analytical interferences. This cylinder has a total analytical uncertainty as stated below with a confidence level of 95%. There are no significant impurities which affect the use of this calibration mixture. All concentrations are on a volume/volume basis unless otherwise noted.
Do Not Use This Cylinder below 150 psig.i.e. 1 Mega Pascal

ANALYTICAL RESULTS

Component	Requested Concentration	Actual Concentration	Protocol Method	Total Relative Uncertainty
CARBON DIOXIDE	9.500 %	9.468 %	G1	+/- 1% NIST Traceable
OXYGEN	12.50 %	12.49 %	G1	+/- 1% NIST Traceable
NITROGEN	Balance			

CALIBRATION STANDARDS

Type	Lot ID	Cylinder No	Concentration	Expiration Date
NTRM/O2	82658	SG9168259BAL	16.04% OXYGEN/	Jan 01, 2010
NTRM/CO2	970511	SG9169385BAL	13.837% CARBON DIOXIDE/NITROGEN	May 01, 2010

ANALYTICAL EQUIPMENT

Instrument/Make/Model	Analytical Principle	Last Multipoint Calibration
HORIBA 510	NDIR	Jan 07, 2009
(P-1) CAI-110	Paramagnetic	Jan 07, 2009

Triad Data Available Upon Request

Notes:

Signature on file

QA Approval

CERTIFICATE OF ANALYSIS

Grade of Product: CERTIFIED STANDARD-SPEC

Part Number	X02A/99C80AC4C/3	Reference Number	54-12414591
Cylinder Number	[illegible]40983	Cylinder Volume	55 Cu Ft
Laboratory	ASG - Chicago - IL	Cylinder Pressure	2214 PSIG
Analysis Date	[illegible] 23 2008	Valve Outlet	660

Product composition verified by direct comparison to calibration standards traceable to NIST/EAST [illegible] weights and to NIST gas mixture reference [illegible]

ANALYTICAL RESULTS

Component	Requested Concentration	Actual Concentration	Analytical Uncertainty
NITROGEN DIOXIDE	45.00 PPM	44.92 PPM	[illegible]
AIR	Balance		

Notes

QA Approval

APPENDIX D. PROCESS DATA

PROCESS DATA FOR LFG ENGINES 1-3

Company: Westside Landfill Engine Plant Date: 4/27/2010
Source: Engines 1 & 2

Start Time		KW	Fuel Flow	Air Flow	BTU	CH4 %	CO2 %	O2 %	ENGINE #
905	Run 1	1611	488	4240	575	56.7	41.1	0.4	1
920		1619	486	4191	575				1
935		1610	490	4384	575				1
950		1621	493	4270	575				1
1015	Run 2	1617	491	4222	575	56.6	41.0	0.4	1
1030		1614	490	4284	575				1
1045		1615	492	4197	575				1
1100		1621	491	4298	575				1
1125	Run 3	1615	489	4308	575	56.7	41.0	0.4	1
1140		1625	493	4272	575				1
1155		1618	490	4277	575				1
1210		1612	494	4309	575				1
	AVERAGE	1617	491	4271	575	56.7	41.0	0.4	
1235	Run 1	1614	490	4327	576	56.7	41.0	0.4	2
1250		1624	486	4306	576				2
1305		1617	487	4298	576				2
1335		1623	485	4313	576				2
1345	Run 2	1621	490	4252	576	56.8	41.1	0.4	2
1400		1609	487	4311	576				2
1415		1615	488	4351	576				2
1430		1606	486	4322	576				2
1455	Run 3	1615	488	4272	577	56.8	41.1	0.4	2
1510		1620	490	4278	577				2
1525		1614	489	4309	577				2
1540		1608	483	4286	577				2
	AVERAGE	1616	487	4302	576	56.8	41.1	0.4	

Company: Westside Landfill Engine Plant Date: 4/28/1010
Source: Engine #3

Start Time		KW	Fuel Flow	Air Flow	BTU	CH4 %	CO2 %	O2 %	ENGINE #
830	Run 1	1605	482	4269	578	56.9	41.2	0.3	3
845		1614	490	4320	578				3
900		1619	495	4222	578				3
915		1618	492	4298	578				3
940	Run 2	1624	491	4285	577	56.9	41.2	0.4	3
955		1608	489	4308	577				3
1010		1614	490	4292	577				3
1025		1626	489	4251	577				3
1050	Run 3	1604	488	4306	578	56.9	41.9	0.3	3
1105		1612	487	4297	578				3
1120		1616	490	4309	578				3
1135		1608	489	4314	578				3
	AVERAGE	1614	489	4289	578	56.9	41.4	0.3	

CORE LABORATORIES

8210 Mosley Rd.
Houston, TX 77075
713-943-9776

Core Lab
RESERVOIR OPTIMIZATION

RMC Environmental Inc
Rachel Chleborowicz
9226 N 2nd Street
Machesney Park, IL 61115

Report Number : 57801-101249
Date Reported: 5/4/2010
Date Received: 5/3/2010

Analytical Report

Sample No.: 101249-001 **Sample ID Eng 1/2 LFG** **Date Sampled 4/27/2010 1:00:0**

Test	Result	Units	Method	Date	Analyst
Ultimate Gas Analysis					
Hydrogen	0.20	Mol %	GP2261ASTM1945	5/3/2010	KTN
Oxygen	0.49	Mol %	GP2261ASTM1945		
Nitrogen	1.94	Mol %			
Carbon Dioxide	41.20	Mol %			
Methane	56.17	Mol %			
Ethane	<0.01	Mol %			
Propane	<0.01	Mol %			
Isobutane	<0.01	Mol %			
n-Butane	<0.01	Mol %			
Isopentane	<0.01	Mol %			
n-Pentane	<0.01	Mol %			
Hexanes Plus	<0.01	Mol %			
Total	100.00	Mol %			
Molar Mass Ratio	0.96148		GP2172ASTM3588		
Relative Density	0.96387				
Compressibility Factor	0.99684				
Gross Heating Value (Dry)	568.0	BTU/CF (Ideal)			
Gross Heating Value (Dry)	569.8	BTU/CF (Real)			
Net Heating Value (Dry)	511.4	BTU/CF (Ideal)			
Net Heating Value (Dry)	513.0	BTU/CF (Real)			
Pressure Base	14.696	psia			
Carbon Content	41.99	WT %			
Hydrogen Content	8.15	WT %			
Oxygen Content	47.91	WT %			
Nitrogen Content	1.95	WT %			
Sulfur Content	0.00	WT %			
F Factor @ 20C & 29.92in.	9321	dscf/mmBTU			

The analytical results, opinions or interpretations contained in this report are based upon information and material supplied by the client for whose exclusive and confidential use this report has been made. The analytical results, opinions or interpretations expressed represent the best judgement of Core Laboratories. Core Laboratories, however, makes no warrant or representation, express or implied, of any type, and expressly disclaims same as to the productivity, proper operation or profitableness of any oil, gas, or other mineral property, well or sand in conjunction with which such report is used or relied upon for any reason whatsoever. This report shall not be reproduced, in whole or in part, without the approval of Core Laboratories.

CORE LABORATORIES

8210 Mosley Rd.
Houston, TX 77075
713-943-9776

RMC Environmental Inc
Rachel Chleborowicz
9226 N 2nd Street
Machesney Park, IL 61115

Report Number : 57801- 101249
Date Reported: 5/4/2010
Date Received: 5/3/2010

Analytical Report

Sample No.: 101249-002 **Sample ID Eng 3 LFG** **Date Sampled 4/28/2010 11:00:**

Test	Result	Units	Method	Date	Analyst
Ultimate Gas Analysis					
Hydrogen	0.20	Mol %	GP2261ASTM1945	5/4/2010	KTN
Oxygen	0.17	Mol %	GP2261ASTM1945		
Nitrogen	1.57	Mol %			
Carbon Dioxide	41.56	Mol %			
Methane	56.50	Mol %			
Ethane	<0.01	Mol %			
Propane	<0.01	Mol %			
Isobutane	<0.01	Mol %			
n-Butane	<0.01	Mol %			
Isopentane	<0.01	Mol %			
n-Pentane	<0.01	Mol %			
Hexanes Plus	<0.01	Mol %			
Total	100.00	Mol %			
Molar Mass Ratio	0.96166		GP2172ASTM3588		
Relative Density	0.96408				
Compressibility Factor	0.99681				
Gross Heating Value (Dry)	571.3	BTU/CF (Ideal)			
Gross Heating Value (Dry)	573.1	BTU/CF (Real)			
Net Heating Value (Dry)	514.4	BTU/CF (Ideal)			
Net Heating Value (Dry)	516.0	BTU/CF (Real)			
Pressure Base	14.696	psia			
Carbon Content	42.28	WT %			
Hydrogen Content	8.19	WT %			
Oxygen Content	47.95	WT %			
Nitrogen Content	1.58	WT %			
Sulfur Content	0.00	WT %			
F Factor @ 20C & 29.92in.	9337	dscf/mmBTU			

The analytical results, opinions or interpretations contained in this report are based upon information and material supplied by the client for whose exclusive and confidential use this report has been made. The analytical results, opinions or interpretations expressed represent the best judgement of Core Laboratories. Core Laboratories, however, makes no warrant or representation, express or implied, of any type, and expressly disclaims same as to the productivity, proper operation or profitableness of any oil, gas, or other mineral property, well or sand in conjunction with which such report is used or relied upon for any reason whatsoever. This report shall not be reproduced, in whole or in part, without the approval of Core Laboratories.

CORE LABORATORIES

8210 Mosley Rd.
Houston, TX 77075
713-943-9776

RMC Environmental Inc
Rachel Chleborowicz
9226 N 2nd Street
Machesney Park, IL 61115

Report Number : 57801-101249
Date Reported: 5/4/2010
Date Received: 5/3/2010

Analytical Report

Sample No.: 101249-002 **Sample ID Eng 3 LFG** **Date Sampled 4/28/2010 11:00:**

Test	Result	Units	Method	Date	Analyst

Approved By: M. Jean Waits

The analytical results, opinions or interpretations contained in this report are based upon information and material supplied by the client for whose exclusive and confidential use this report has been made. The analytical results, opinions or interpretations expressed represent the best judgement of Core Laboratories. Core Laboratories, however, makes no warrant or representation, express or implied, of any type, and expressly disclaims same as to the productivity, proper operation or profitableness of any oil, gas, or other mineral property, well or sand in conjunction with which such report is used or relied upon for any reason whatsoever. This report shall not be reproduced, in whole or in part, without the approval of Core Laboratories.

CORE LABORATORIES

Core Lab
RESERVOIR OPTIMIZATION
8210 Mosley Road
Houston, Texas 77075
Phone: 713-943-9776
Fax: 713-943-3846

No. 26451

CHAIN OF CUSTODY RECORD

CUSTOMER INFORMATION	PROJECT INFORMATION
COMPANY: RMC Environmental, Inc	PROJECT NAME/NUMBER: 2010 15947
SEND REPORT TO: R. Chleborny	BILLING INFORMATION
ADDRESS: 9226 N. 2nd St.	BILL TO:
Machesy Park, IL 61115	ADDRESS: PO Box 2131
RMCE@AirMonitoring.com	Atlantic Beach, NC 28512
PHONE: 815-378-6150	PHONE:
FAX: 815-425-1102	FAX: PO NO.:

LAB JOB NO.

SAMPLE NO.	SAMPLE	SAMPLE DATE	SAMPLE TIME		NER	PRESERV.	NUMBER OF CONTAINERS	ANALYSIS / METHOD REQUEST: Ultimate Analysis	F-Freon Det.							REMARKS / PRECAUTIONS
Eng 1/2	LFG	4/27/10	1300	LFG	1433		1	✓	✓							
Eng 3	LFG	4/28/10	11:00	LFG	1818		1	✓	✓							

SAMPLER: SHIPMENT METHOD: AIRBILL NO.:

REQUIRED TURNAROUND:* ☐ SAME DAY ☐ 24 HOURS ☐ 48 HOURS ☐ 72 HOURS ☒ 5 DAYS ☐ 10 DAYS ☑ ROUTINE OTHER

1. RELINQUISHED BY:	DATE	2. RELINQUISHED BY:	DATE	3. RELINQUISHED BY:	DATE
SIGNATURE: [signature]	4/28/10	SIGNATURE:		SIGNATURE:	
PRINTED NAME/COMPANY: Rachel Chleborny / RMCEnv	TIME 1208	PRINTED NAME/COMPANY:	TIME	PRINTED NAME/COMPANY:	TIME
1. RECEIVED BY:	DATE	2. RECEIVED BY:	DATE	3. RECEIVED BY:	DATE
SIGNATURE: [signature]	5-3-10	SIGNATURE:		SIGNATURE:	
PRINTED NAME/COMPANY: [signature]	TIME 1:45	PRINTED NAME/COMPANY:	TIME	PRINTED NAME/COMPANY:	TIME

* RUSH TURNAROUND MAY REQUIRE SURCHARGE

ORIGINAL

CORE LABORATORIES

Core Lab
RESERVOIR OPTIMIZATION
8210 Mosley Road
Houston, Texas 77075
Phone: 713-943-9776
Fax: 713-943-3846

No. 26451

CHAIN OF CUSTODY RECORD

CUSTOMER INFORMATION	PROJECT INFORMATION
COMPANY	PROJECT NAME/NUMBER:
SEND REPORT TO	BILLING INFORMATION
ADDRESS	BILL TO:
	ADDRESS:
PHONE:	PHONE:
FAX	FAX: PO NO.:

LAB JOB NO.

SAMPLE NO.	SAMPLE DESCRIPTION	SAMPLE DATE	SAMPLE TIME	SAMPLE MATRIX	CONTAINER	PRESERV.	NUMBER OF CONTAINERS	ANALYSIS / METHOD REQUEST	REMARKS / PRECAUTIONS
			11 00						

SAMPLER: SHIPMENT METHOD: AIRBILL NO.:

REQUIRED TURNAROUND:* ☐ SAME DAY 24 HOURS ☐ 48 HOURS ☐ 72 HOURS ☒ 5 DAYS ☐ 10 DAYS ☐ ROUTINE OTHER

1. RELINQUISHED BY:	DATE	2. RELINQUISHED BY:	DATE	3. RELINQUISHED BY:	DATE
SIGNATURE:		SIGNATURE:		SIGNATURE:	
PRINTED NAME/COMPANY:	TIME	PRINTED NAME/COMPANY:	TIME	PRINTED NAME/COMPANY:	TIME
1. RECEIVED BY:	DATE	2. RECEIVED BY:	DATE	3. RECEIVED BY:	DATE
SIGNATURE:		SIGNATURE:		SIGNATURE:	
PRINTED NAME/COMPANY:	TIME	PRINTED NAME/COMPANY:	TIME	PRINTED NAME/COMPANY:	TIME

* RUSH TURNAROUND MAY REQUIRE SURCHARGE

CLIENT COPY

APPENDIX E. RESUMES OF TEST PERSONNEL

Rachel Chleborowicz-QSTI

Senior Technical Staff

Primary Role: Sr. Project Manager

Other Role(s): Source Testing
Ambient Monitoring
Laboratory Analysis
Emissions Factors Development
Regulatory Support
Data Analysis

Firm: RMC Environmental, Inc.

Level: Professional Level 4

Experience: 20 years

Education: BS, 1990, Biology and Chemistry, UNC-Chapel Hill

QSTI Certification - 2009

Basis for Selection:

- **Currently Sr. Project Manager on confidential clients' project to characterize air emissions from landfill gas engines around the country.**
- **Served as Sr. Program Manager on over 1250 compliance and source emissions tests encompassing over 12 different source categories.**
- **Managed more than 100 projects conducted to evaluate applicability of current AP-42 factors.**

Ms. Chleborowicz has specialized in source testing and ambient air monitoring for over 15 years. She is responsible for administrative and technical management of RMC Environmental, Inc., a woman owned source testing company headquartered in Chicago, Illinois. Her experience on over 1000 projects for private clients through out the country and Canada includes developing potential air emissions and air pollution emission inventories, conducting compliance assessments, preparing operating permit applications, supporting regulatory development, evaluating regulatory applicability, and performing QA/QC activities for air quality projects.

Relevant Experience:

Source Testing

Evaluated emissions from landfill gas engines, Private Clients. Conducting emissions tests at numerous LFG plants around the US to quantify controlled and uncontrolled emissions as well as determined the destruction efficiencies for combined and individual HAPs.

Evaluated Emissions from Glass Bead Production, Private Client. Conducted testing of total particulate, PM 10 and PM 2.5 emissions from a glass bead production facility – this facility makes the glass beads added to paints to give them their reflective properties. Prepared Site-Specific Test Plans and a Quality Assurance Project Plan (QAPP), field testing, laboratory analyses, data reduction and report preparation.

Evaluated Emissions from Gas turbines, Private Clients. Conducted testing of formaldehyde, benzene and other HAPS emissions from newly installed gas turbines comparing analytical results from EPA Method 0030, the "Chilled Impinger Method" from NCASI, TO-12, TO-15, EPA Method 18 and EPA Method 25A. Prepared Site-Specific Test Plans, field testing, laboratory analyses, data reduction and report preparation.

Evaluated Compliance of Air Emissions from 23 dust collectors, Private Client. Evaluated air emissions from a newly built utility with almost 23 individual dust collectors. Tested these collectors under maximum and minimum production to determine where the manufacturer and consultant varied on the permitted limits. Developed a test protocol acceptable to the regulatory agency and assisted the regulatory agency in calculating applicable and attainable permit limits for the facility.

Development of General Work Plans, and Site-Specific Test Plans (SSTPs), Private Clients. Prepared more than 750 work plans, for clients, ranging from single, routine compliance test programs to complex startups. Prepared more than 225 SSTPs, including projects for clients that included FTIRS, ammonia testing, ambient monitoring and on-site GC/MS.

Ambient Monitoring

Installed and quantified ambient baseline emissions, Private Client. Installed and responsible for four continuous monitoring locations for measuring suspended particulates and gaseous pollutants. Conducted to determine pollutant effects and effects of air pollution on vegetation, surrounding residences and wildlife.

Indoor air quality at US Army Base, Fort Bragg, NC. Responsible for gathering baseline air quality (metals, total particulate, HAPs and VOCs) for tactical / field welding "Pods" for solders working in both enclosed and open "Pods." Selected and procured sampling equipment, and trained us army personnel to operate the equipment, coordinated with US Army personnel, and provided trouble-shooting and support services.

Laboratory Analysis

Managed Routine and Complex Analyses, Private Clients. Responsible for analyses performed in-house by RMC Environmental, Inc. and by outside contract laboratories. Ensures that source emissions samples are analyzed in a manner consistent with EPA reference Methods or other standard methodologies. Samples analyzed include air emission samples, (e.g., particulates, fluorides, H_2S, total VOC, dioxin/furan, trace metals, and PCBs) and process samples (e.g, solid, liquid, and gaseous fuels; inks, paints, solvents; water and wastewater).

Analyzed TSP and PM10 Samples, Private Client. Provide analytical services to support an ambient sampling program at a recently closed hazardous waste landfill. Developed SOPs for TSP and PM10 analyses, provided filter media, and provided gravimetric analyses of the collected samples. Analyzed more than 600 individual samples.

Regulatory Support

Supported Air Standard Development, State Agencies. Regularly provide regulatory support by preparing responses regarding testing and permitting issues, VOC capture efficiency test protocols, sampling and analytical procedures, and review and comment on general policy guidance. Participated in the development of standardized State forms for protocol and report preparation. Have conducting site visits to evaluate with state agencies to evaluate the feasibility of using specific methodologies and enclosures for printing and VOC producing facilities.

Data Analysis

BETA and final testing of PC-based Data Reduction ISOCALC Program, Private Client. Involved in development of PC-based data reduction tool for use in calculating results for EPA Methods 1 through 5. This program is utilized by testing companies and state agencies.

Quality Assured Emissions Test Data Calculations, Private Clients. In the performance of source testing projects, responsible for field and laboratory data reduction, and calculation and tabulation of final results. These projects range in complexity from routine Method 5 compliance tests to more sophisticated calculations for trace metals, dioxin/furan, PCBs, volatile and semi-volatile organics, CEMS, and DRE testing.

Gregory Chleborowicz

Senior Technical Staff

Primary Role: Source Testing

Other Role(s): Ambient Monitoring
Laboratory Analysis
Data Analysis

Firm: RMC Environmental, Inc.

Level: Professional Level 3

Experience: 12 years

Education: BS, 1997, Chemical Engineering, UNC-Charlotte

Basis for Selection:

- **Currently Project Manager on Private Client – offset and gravuere printing process for VOC/HAPS and emissions inventory.**
- **Served as Program Manager on over 500compliance and source emissions tests encompassing over 12 different source categories.**
- **Managed more than 25 projects conducted to evaluate applicability of current AP-42 factors.**

Mr. Chleborowicz has specialized in source testing and ambient air monitoring for over 9 years. He is responsible for overseeing the technical management and source-testing personnel of RMC Environmental, Inc., a woman owned source testing company headquartered in Chicago, Illinois. His experience on over 700 projects for private clients through out the country and Canada includes developing potential air emissions and air pollution emission inventories, conducting compliance assessments, supporting regulatory development, evaluating regulatory applicability, and performing QA/QC activities for air quality projects.

Relevant Experience:

Source Testing

Evaluating VOC / HAPs emissions from Offset and Gravuere Printing Presses, Private Client. Conducting emissions tests at 10 different priniting facilities plants to quantify controlled and uncontrolled emissions as well as determined the destruction efficiencies for individual total VOCs HAPs. Optimizing the oxidizers associated with these presses to minimize the amount of wasted natural gas thereby lowering the costs associated with running these oxidizers and minimize the Total VOC and HAPS output.

Evaluated Emissions from Glass Bead Production, Private Client. Conducted testing of total particulate, PM 10 and PM 2.5 emissions from a glass bead production facility – this facility makes the glass beads added to paints to give them their reflective properties. Prepared Site-Specific Test Plans and a Quality Assurance Project Plan (QAPP), field testing, laboratory analyses, data reduction and report preparation.

Evaluated Emissions from 8 Gas turbines, Private Client. Conducted testing of formaldehyde, emissions from eight newly installed gas turbines comparing analytical results from EPA method 0030 and the "Chilled Impinger Method" from NCASI. Prepared Site-Specific Test Plans, field testing, laboratory analyses, data reduction and report preparation.

Evaluated Compliance of Air Emissions from 23 dust collectors, Private Client. Evaluated air emissions from a newly built utility with almost 23 individual dust collectors. Tested these collectors under maximum and minimum production to determine where the manufacturer and consultant varied on the permitted limits. Developed a test protocol acceptable to the regulatory agency and assisted the regulatory agency in calculating applicable and attainable permit limits for the facility.

Development of General Work Plans, and Site-Specific Test Plans (SSTPs), Private Clients. Prepared more than 100 work plans, for clients, ranging from single, routine compliance test programs to complex startups. Prepared more than 50 SSTPs, including projects for clients that included FTIRS, ammonia testing, ambient monitoring and on-site GC/MS.

Use or disclosure of data contained on this sheet is subject to the restriction on the title page of this proposal.

Ambient Monitoring

Installed and quantified ambient baseline emissions, Private Client. Installed and responsible for four continuous monitoring locations for measuring suspended particulates and gaseous pollutants. Conducted to determine pollutant effects and effects of air pollution on vegetation, surrounding residences and wildlife.

Indoor air quality at US Army Base, Fort Bragg, NC. Managed the baseline air quality testing (metals, total particulate, HAPs and VOCs) for tactical / field welding "Pods" for solders working in both enclosed and open "Pods." Selected and procured sampling equipment, and trained us army personnel to operate the equipment, coordinated with US Army personnel, and provided trouble-shooting and support services.

Laboratory Analysis

Managed Routine and Complex Analyses, Private Clients. Responsible for analyses performed in-house by RMC Environmental, Inc. and by outside contract laboratories. Ensures that source emissions samples are analyzed in a manner consistent with EPA reference Methods or other standard methodologies. Samples analyzed include air emission samples, (e.g., particulates, fluorides, H_2S, total VOC, dioxin/furan, trace metals, and PCBs) and process samples (e.g, solid, liquid, and gaseous fuels; inks, paints, solvents; water and wastewater).

Analyzed TSP and PM10 Samples, Private Client. Provide analytical services to support an ambient sampling program at a recently closed hazardous waste landfill. Developed SOPs for TSP and PM10 analyses, provided filter media, and provided gravimetric analyses of the collected samples. Analyzed more than 100 individual samples.

Regulatory Support

Supported Air Standard Development, State Agencies. Regularly provides regulatory support by preparing responses regarding testing and permitting issues, VOC capture efficiency test protocols, sampling and analytical procedures, and review and comment on general policy guidance. Participated in the development of standardized State forms for protocol and report preparation. Have conducting site visits to evaluate with state agencies to evaluate the feasibility of using specific methodologies and enclosures for printing and VOC producing facilities.

Data Analysis

BETA and final testing of PC-based Data Reduction ISOCALC Program, Private Client. Involved in development of PC-based data reduction tool for use in calculating results for EPA Methods 1 through 5. This program is utilized by testing companies and state agencies.

Quality Assured Emissions Test Data Calculations, Private Clients. In the performance of source testing projects, responsible for field and laboratory data reduction, and calculation and tabulation of final results. These projects range in complexity from routine Method 5 compliance tests to more sophisticated calculations for trace metals, dioxin/furan, PCBs, volatile and semi-volatile organics, CEMS, and DRE testing.

Use or disclosure of data contained on this sheet is subject to the restriction on the title page of this proposal.